BORST Industrievertretungen
Welf Borst
Luikenweg 28
73733 Esslingen

Tel.: 0711 - 370 36 68
Fax: 0711 - 370 36 68
Mobil: 0151 - 11631111
Email: info@welf-borst.de

BORST Industrievertretungen
Welf Borst
Luikenweg 28
73733 Esslingen
Tel.: 0711 - 370 36 68
Fax: 0711 - 370 36 68

Abkantwerkzeuge

Alle Angaben ohne Gewähr

90°

BORST Industrievertretungen
Welf Borst
Luikenweg 28
73733 Esslingen
Tel.: 0711 - 370 36 68
Fax: 0711 - 370 36 68

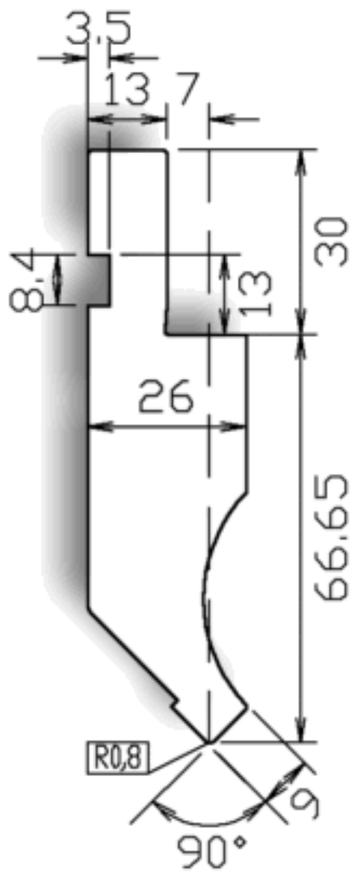

BORST Industrievertretungen
Welf Borst
Luikenweg 28
73733 Esslingen

Tel.: 0711 - 370 36 68
Fax: 0711 - 370 36 68
Mobil: 0151 - 11631111
Email: info@welf-borst.de

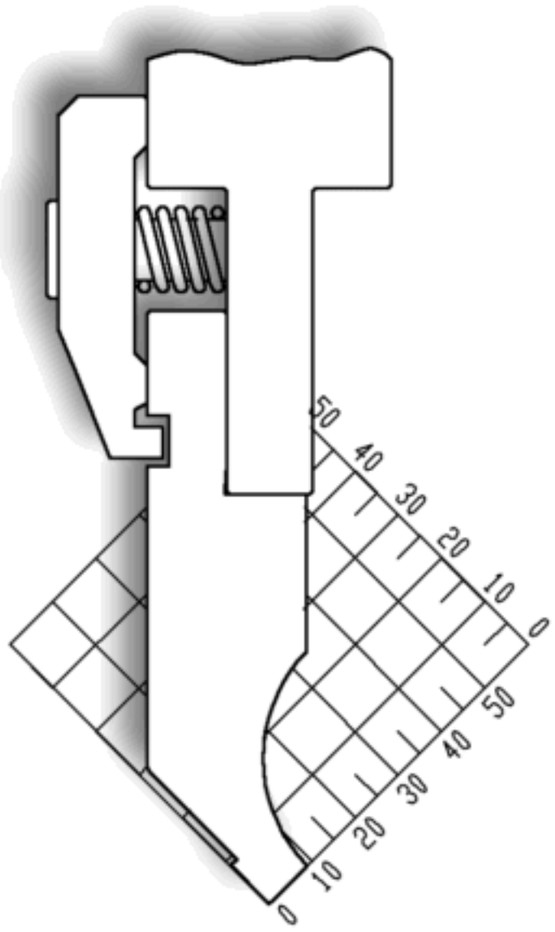

US 110/90°R0,8

max 1000 kN/mt.
l.mm.835-415-Fraz.

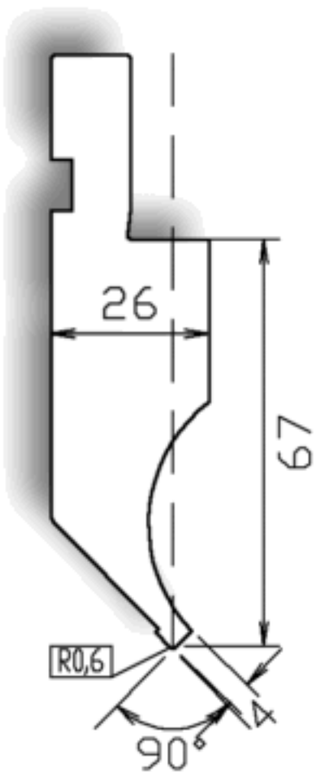

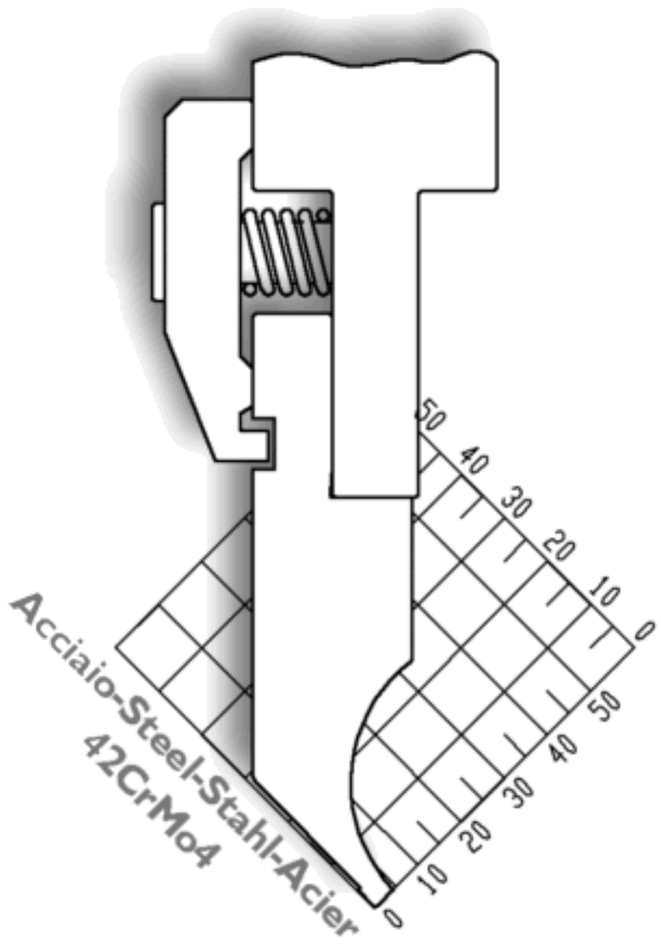

US 126/90°R0,6

max 350 kN/mt.
l.mm.835-415-Fraz.

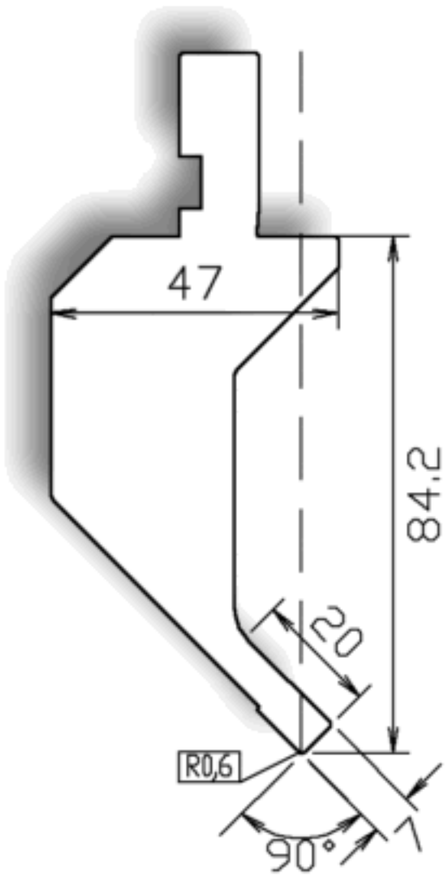

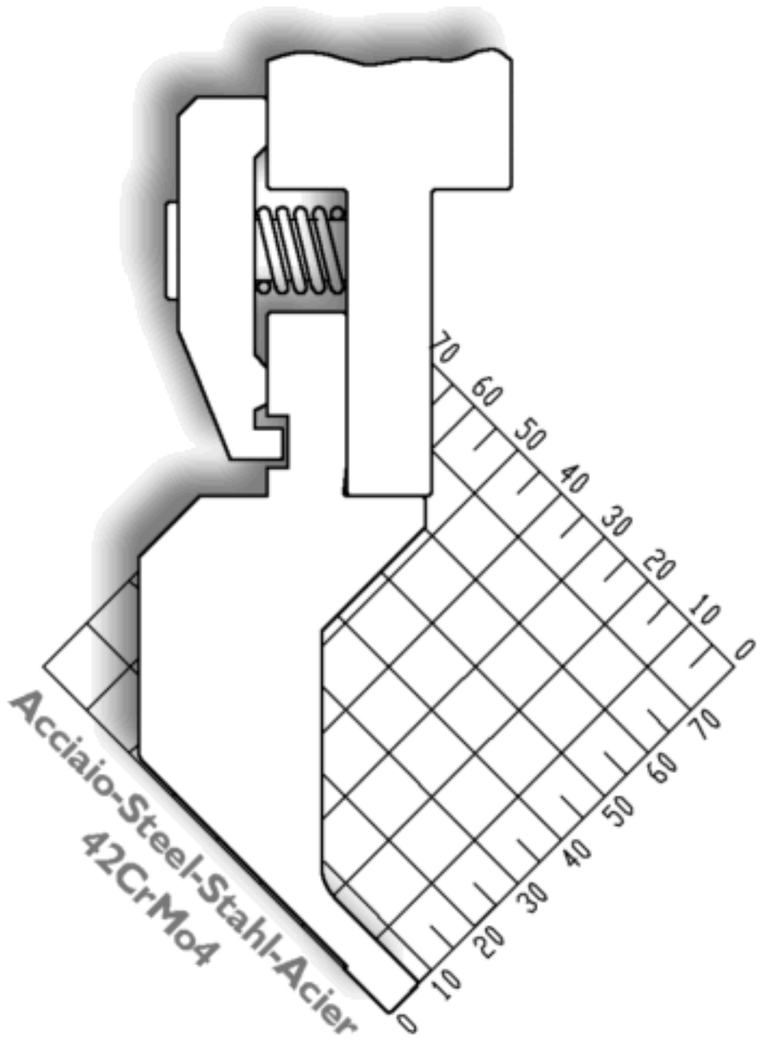

US02

scala 1:2

US 117/90°R0,6

max 300 kN/mt.
l.mm.835-415-Fraz.

BORST Industrievertretungen
Welf Borst
Luikenweg 28
73733 Esslingen

Tel.: 0711 - 370 36 68
Fax: 0711 - 370 36 68
Mobil: 0151 - 11631111
Email: info@welf-borst.de

90°

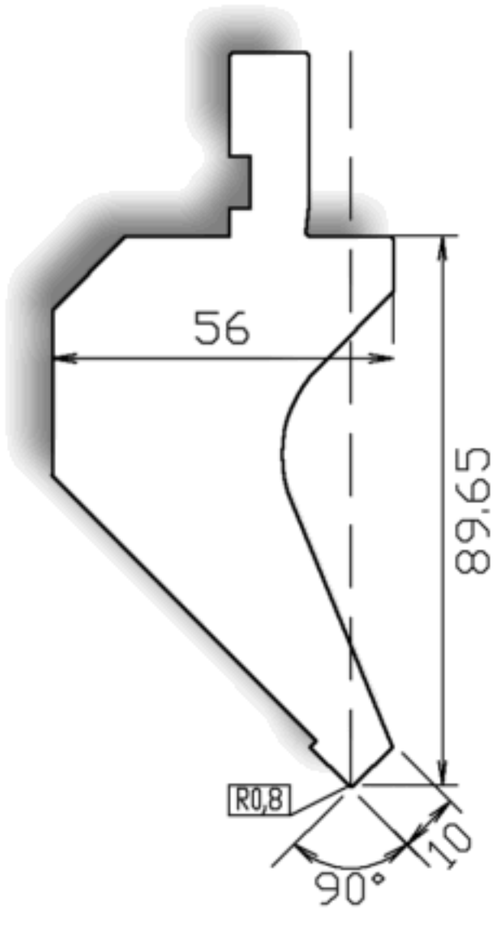

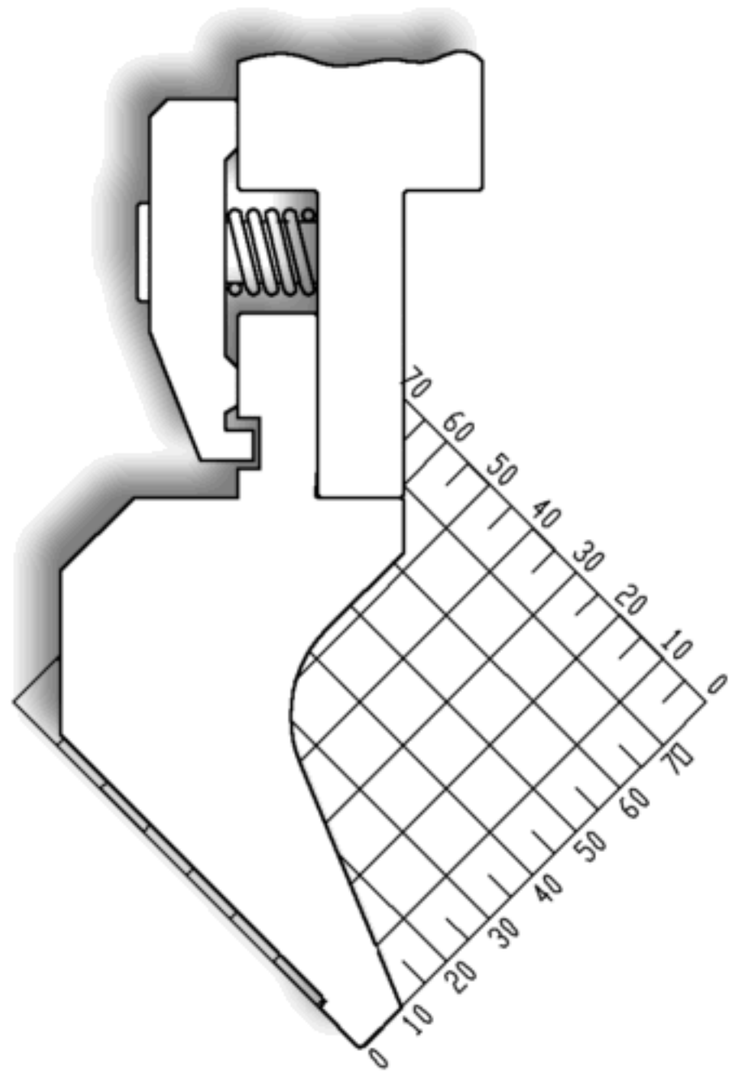

US 114/90°R0,8

max 600 kN/mt.
l.mm.835-415-Fraz.

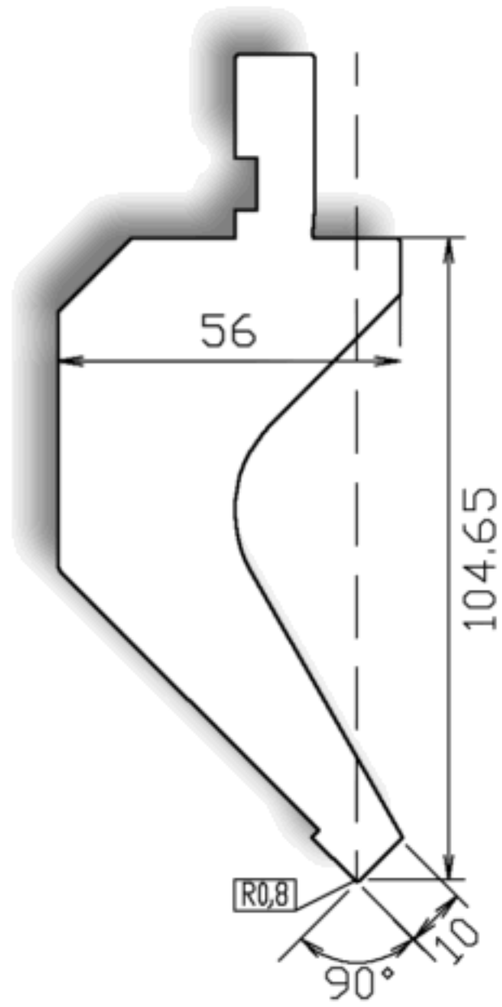

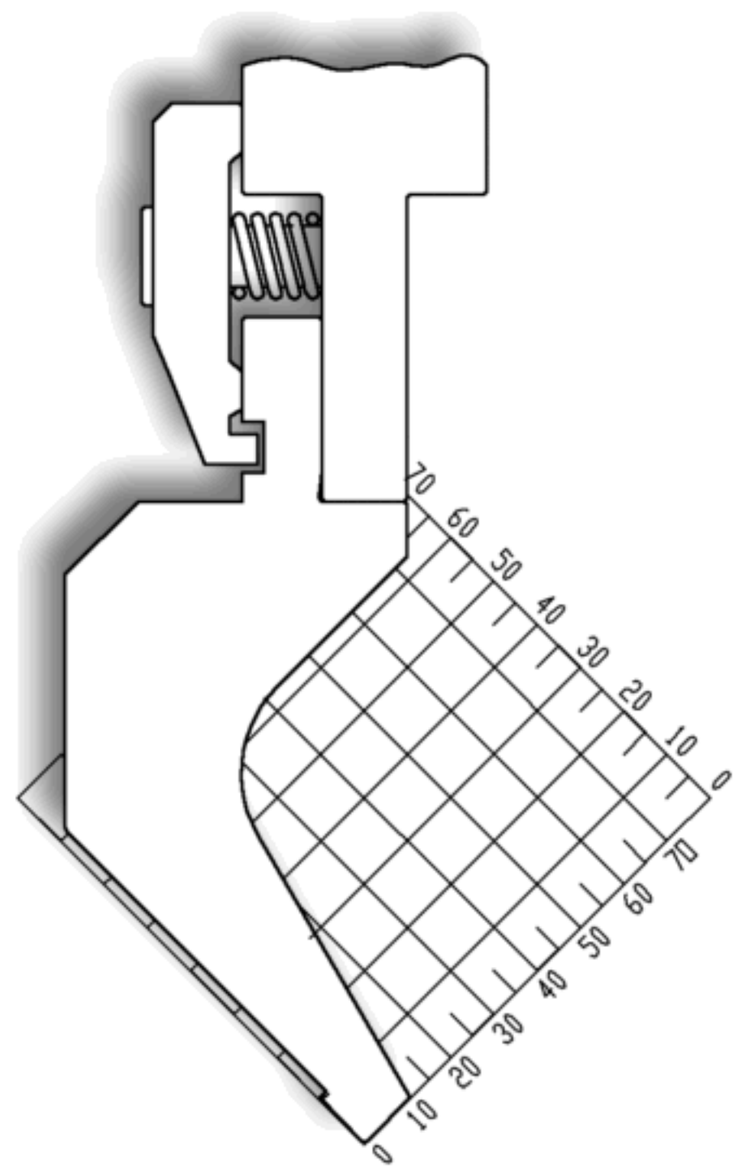

US 115/90°R0,8

max 500 kN/mt.
l.mm.835-415-Fraz.

US03

scala 1:2

88°

BORST Industrievertretungen
Welf Borst
Luikenweg 28
73733 Esslingen
Tel.: 0711 - 370 36 68
Fax: 0711 - 370 36 68

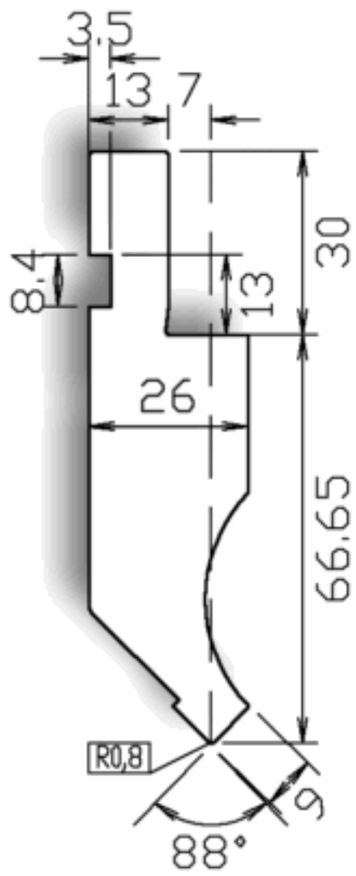

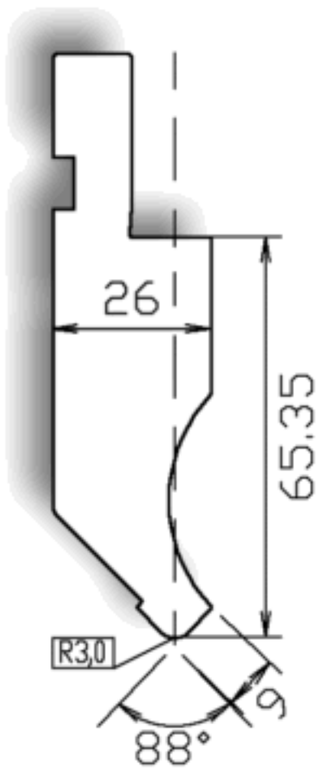

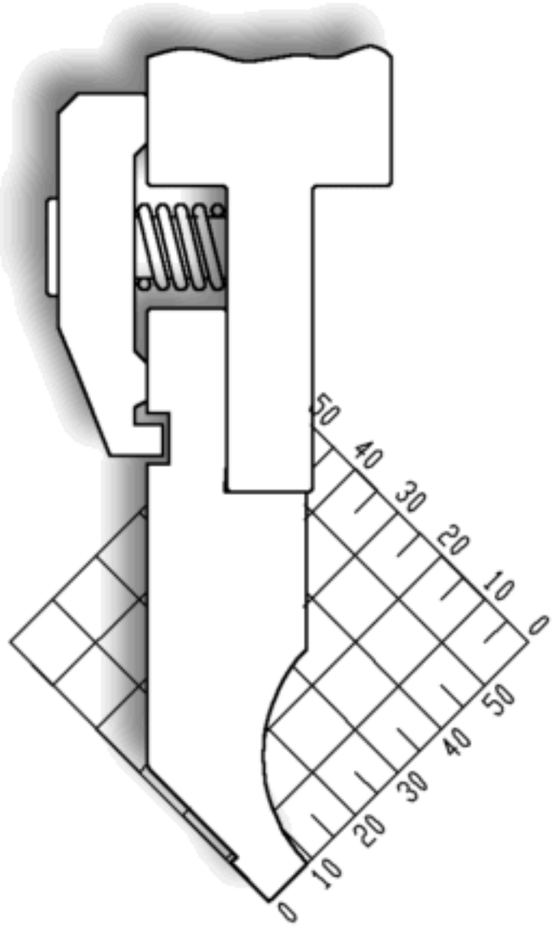

US 110/88°R0,8 **US 110/88°R3,0** **max 1000 kN/mt.** l.mm.835-415-Fraz.

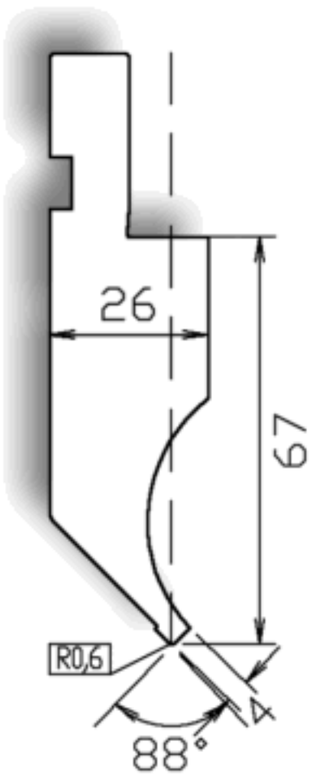

BORST Industrievertretungen
Welf Borst
Luikenweg 28
73733 Esslingen

Tel.: 0711 - 370 36 68
Fax: 0711 - 370 36 68
Mobil: 0151 - 11631111
Email: info@welf-borst.de

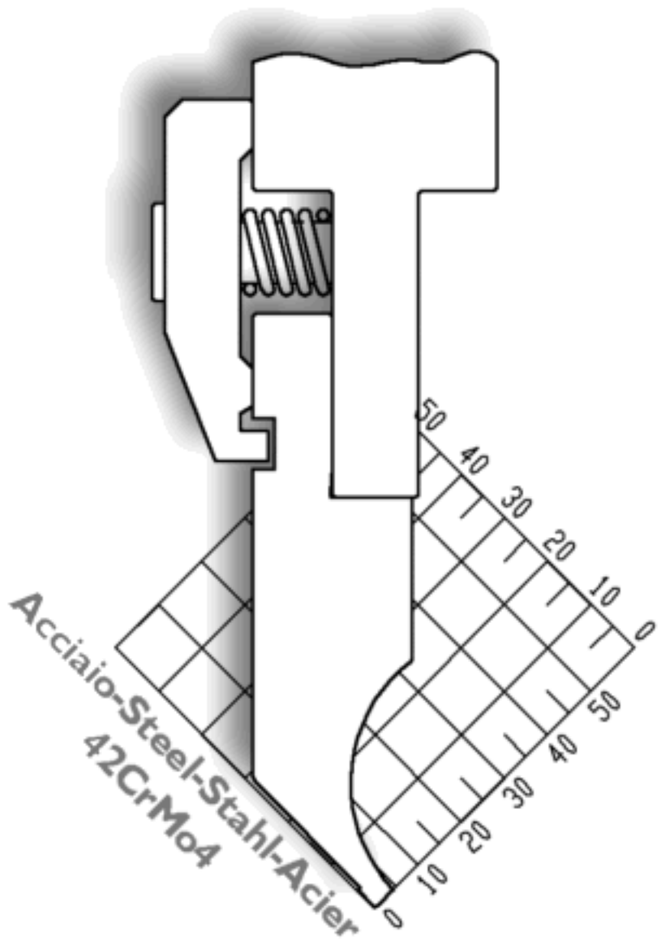

US 126/88°R0,6 **max 350 kN/mt.** l.mm.835-415-Fraz.

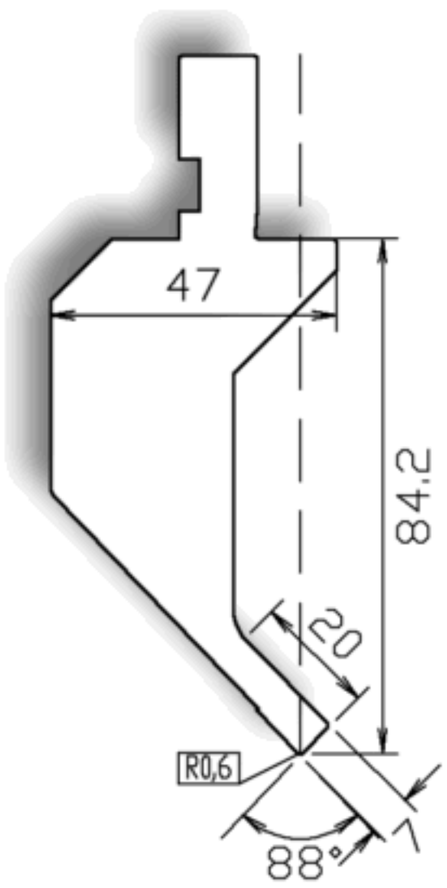

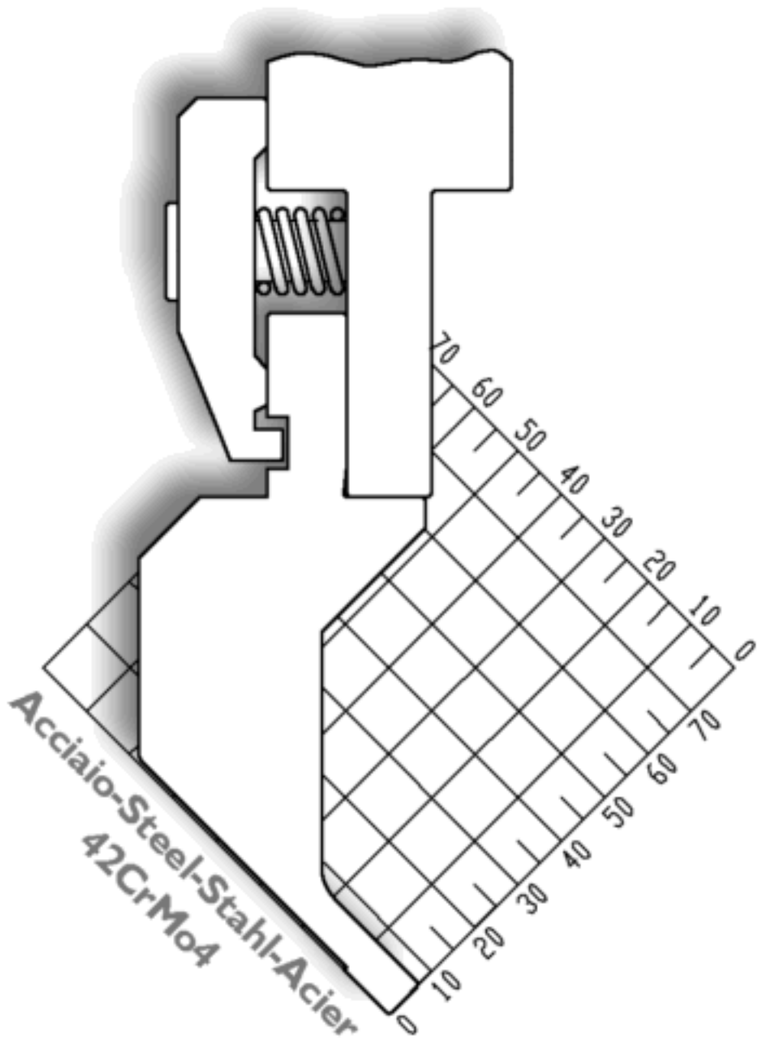

US04

scala 1:2

US 117/88°R0,6 **max 300 kN/mt.** l.mm.835-415-Fraz.

88°

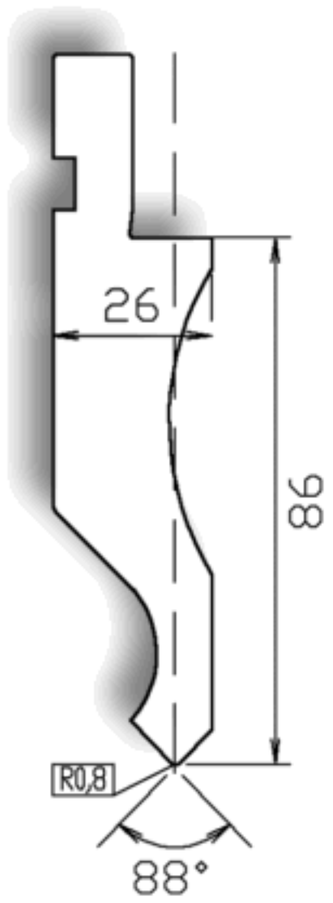

BORST Industrievertretungen
Welf Borst
Luikenweg 28
73733 Esslingen

Tel.: 0711 - 370 36 68
Fax: 0711 - 370 36 68
Mobil: 0151 - 11631111
Email: info@welf-borst.de

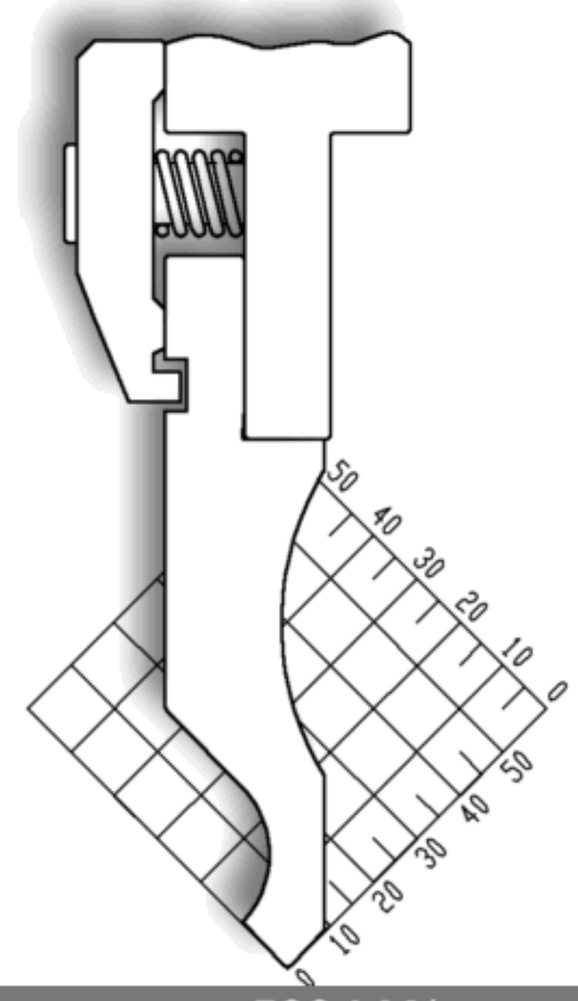

US 120/88°R0,8 — **max 500 kN/mt.** l.mm.835-415-Fraz.

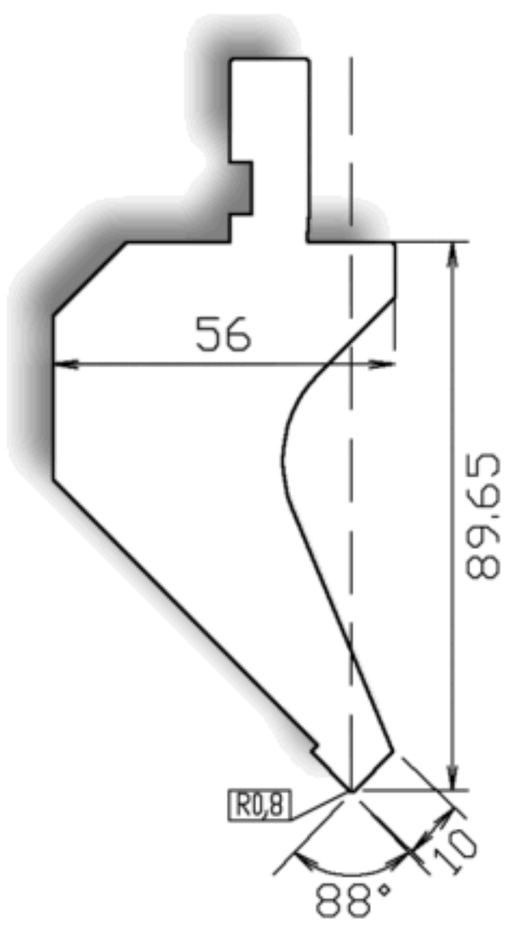

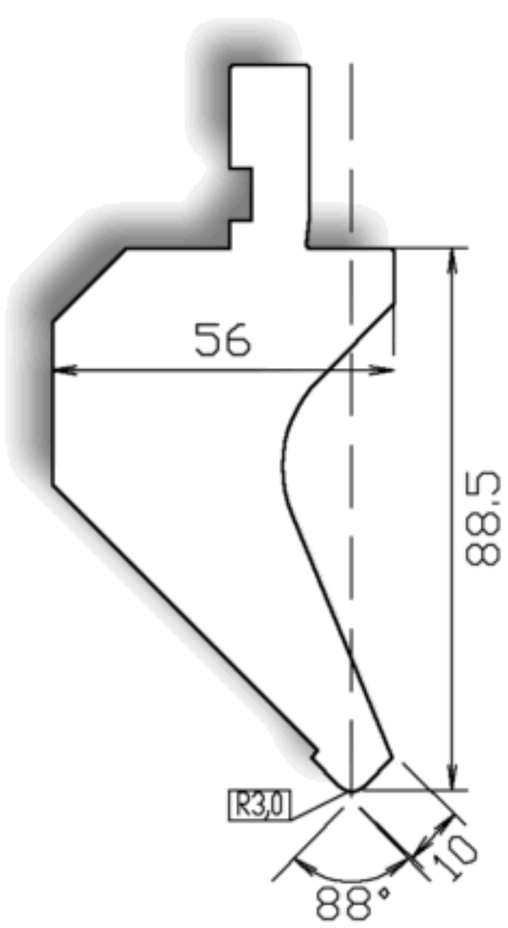

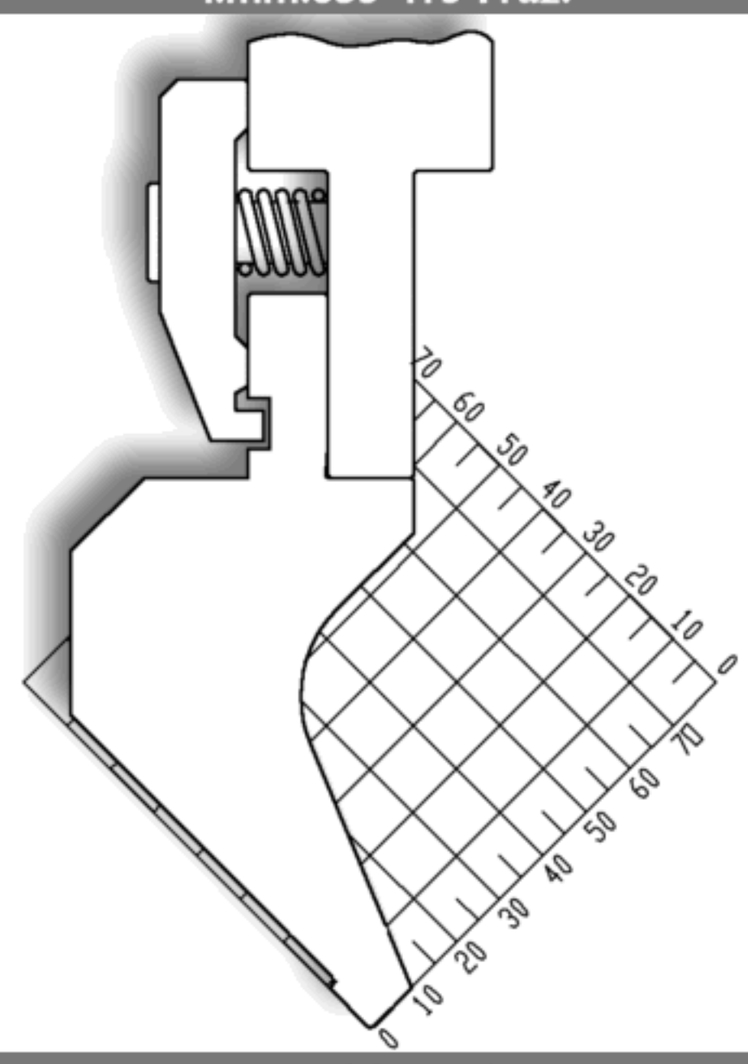

US 114/88°R0,8 **US 114/88°R3,0** — **max 600 kN/mt.** l.mm.835-415-Fraz.

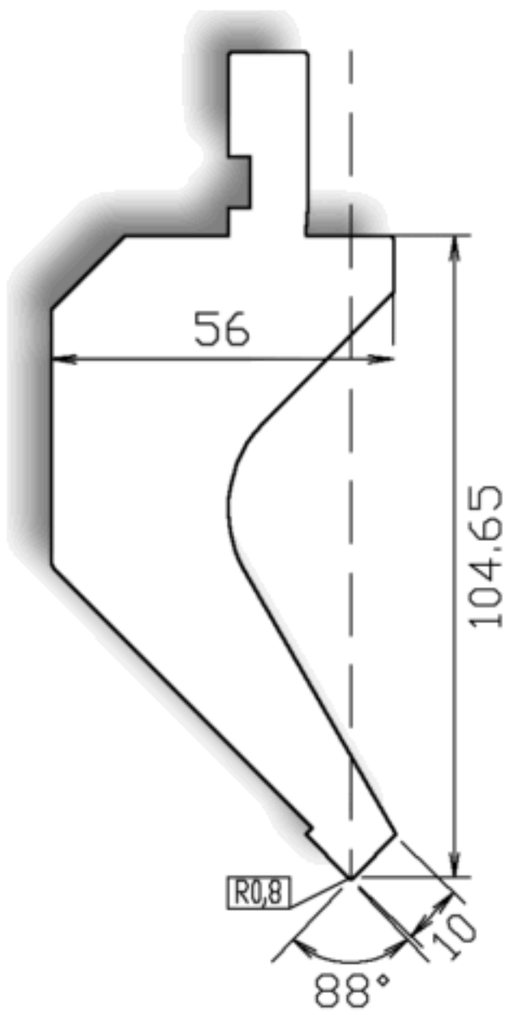

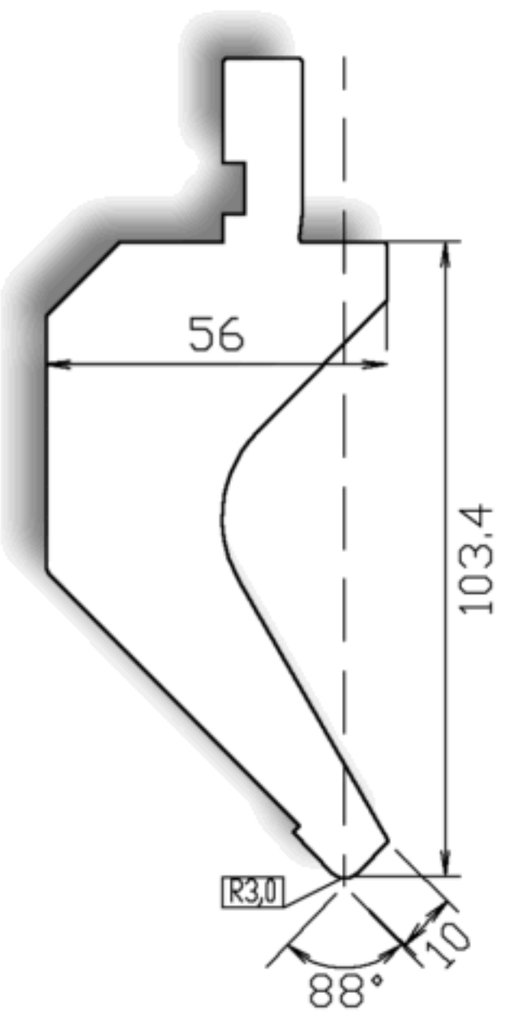

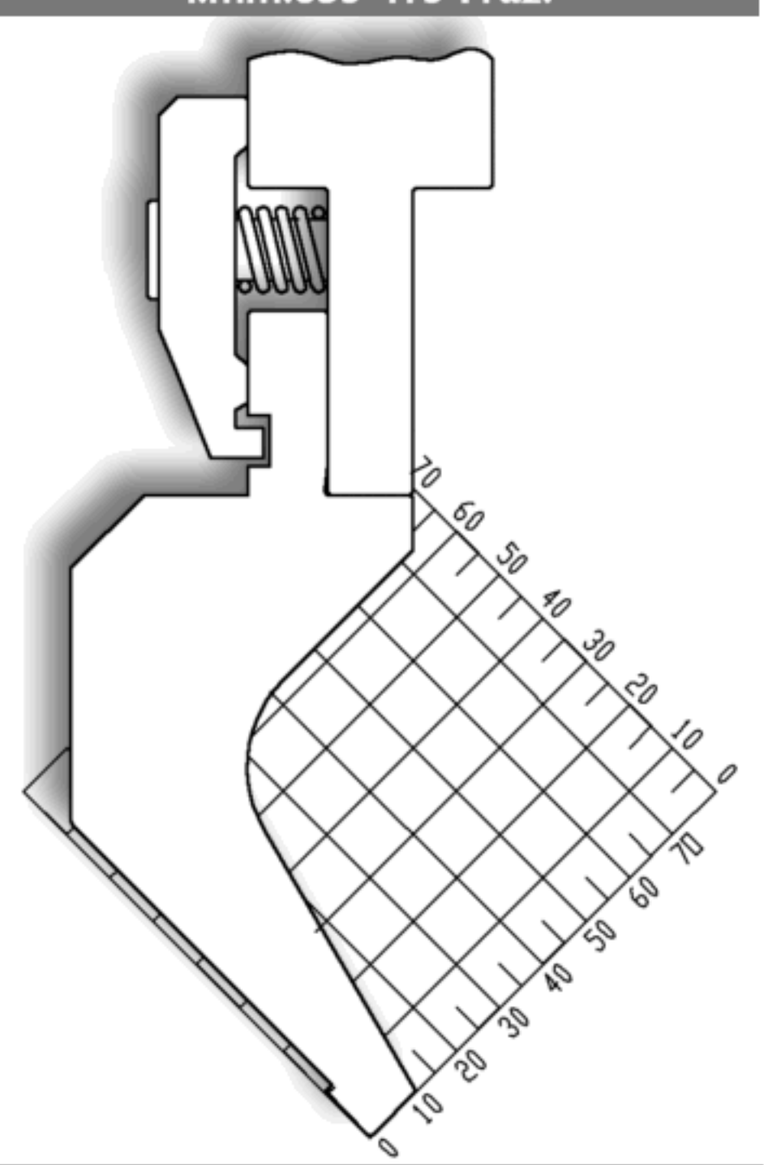

US 115/88°R0,8 **US 115/88°R3,0** — **max 500 kN/mt.** l.mm.835-415-Fraz.

US05

scala 1:2

88°

BORST Industrievertretungen
Welf Borst
Luikenweg 28
73733 Esslingen
Tel.: 0711 - 370 36 68
Fax: 0711 - 370 36 68

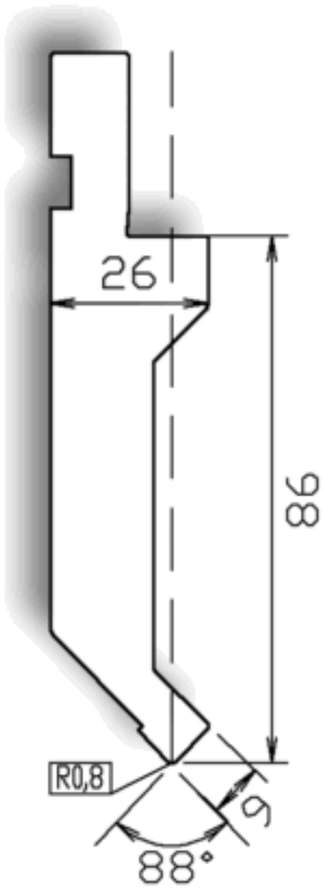

BORST Industrievertretungen
Welf Borst
Luikenweg 28
73733 Esslingen

Tel.: 0711 - 370 36 68
Fax: 0711 - 370 36 68
Mobil: 0151 - 11631111
Email: info@welf-borst.de

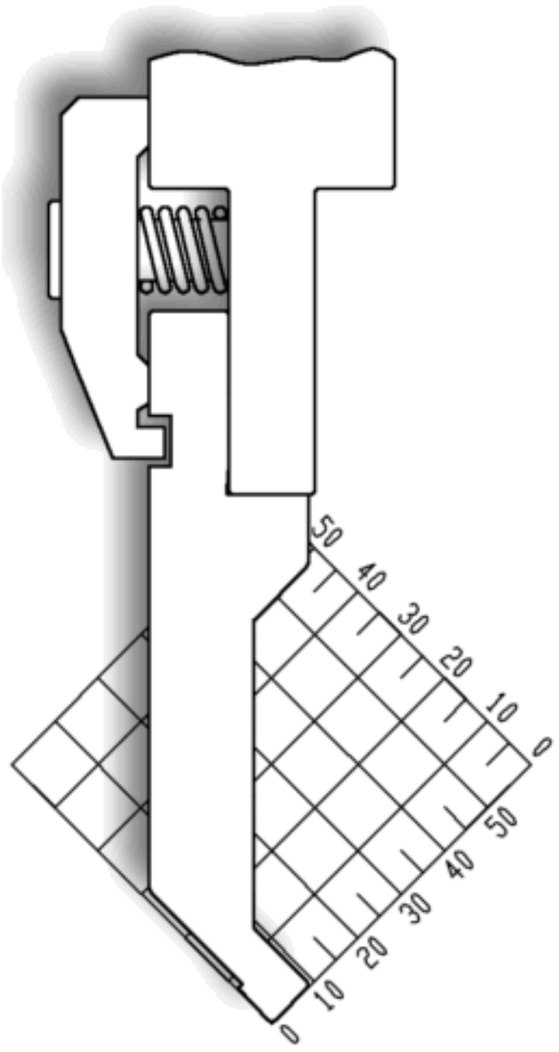

US 125/88°R0,8

max 500 kN/mt.
l.mm.835-415-Fraz.

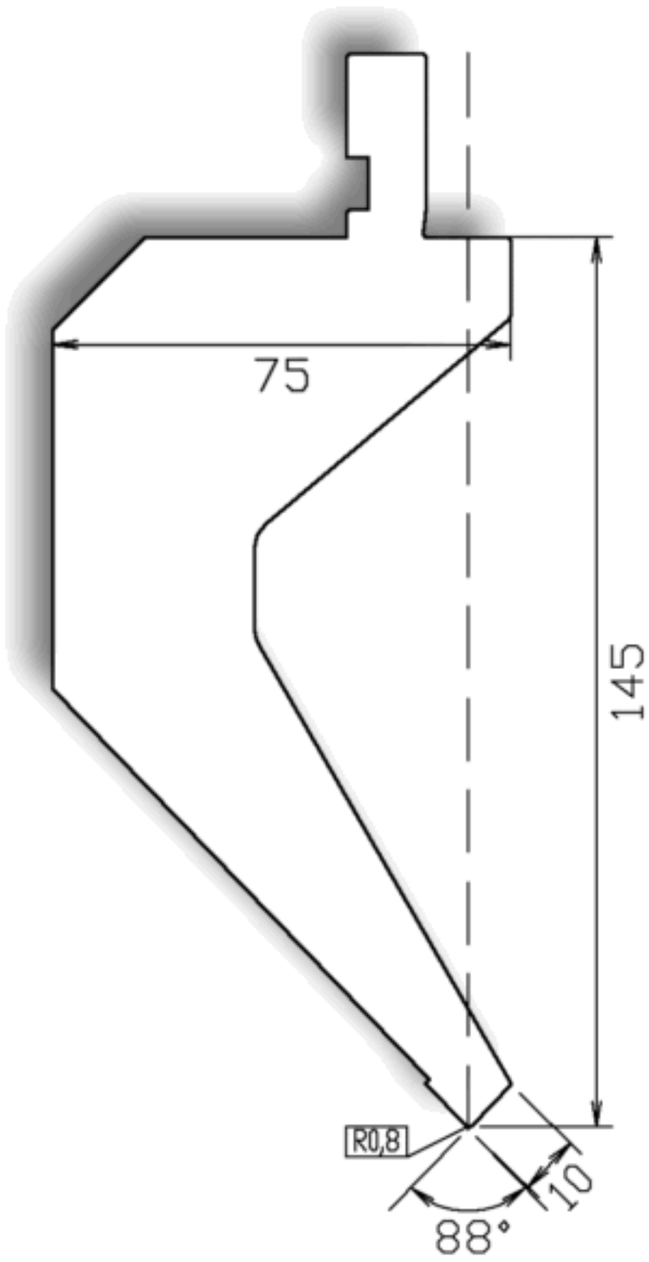

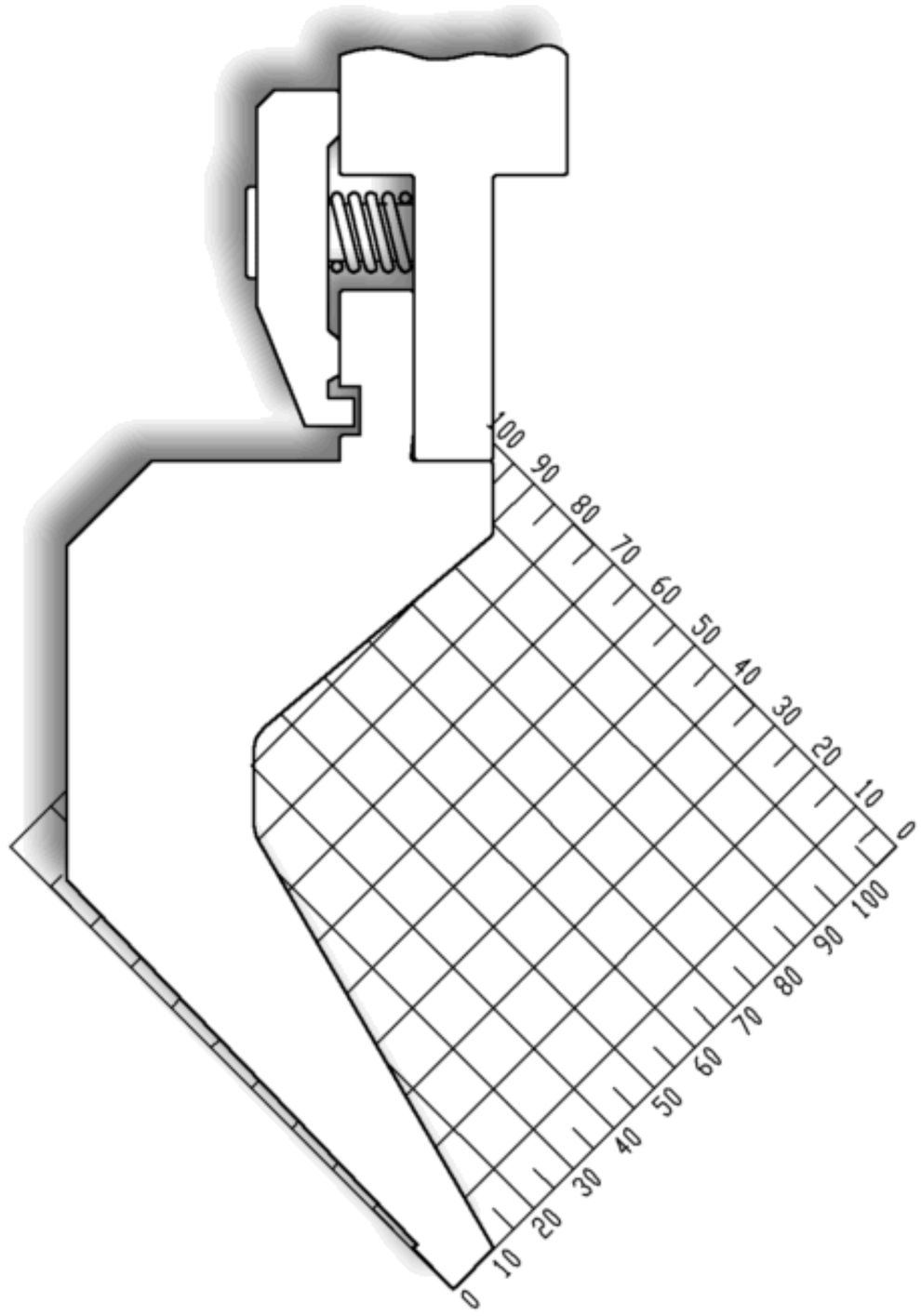

US06

US 127/88°R0,8

max 500 kN/mt.
l.mm.835-415-Fraz.

scala 1:2

85°

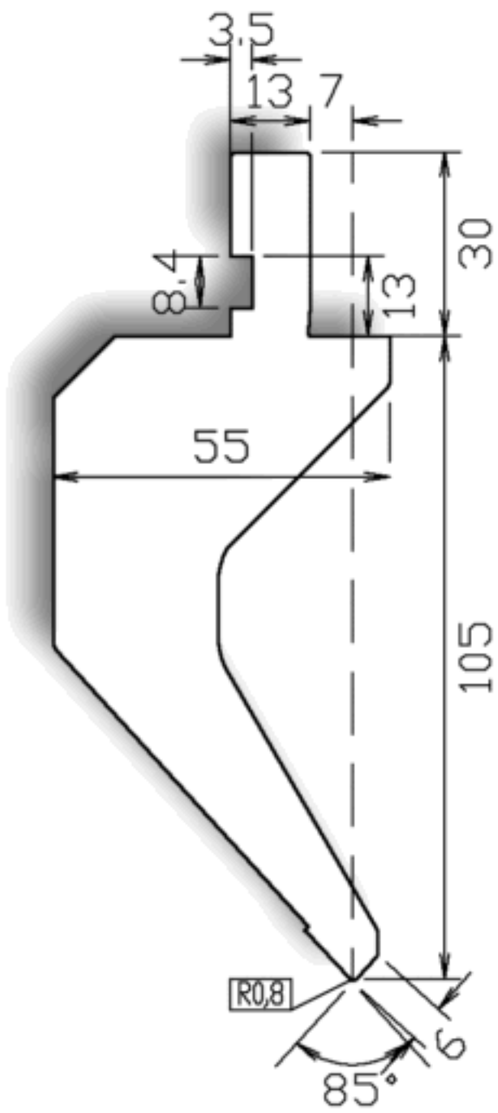

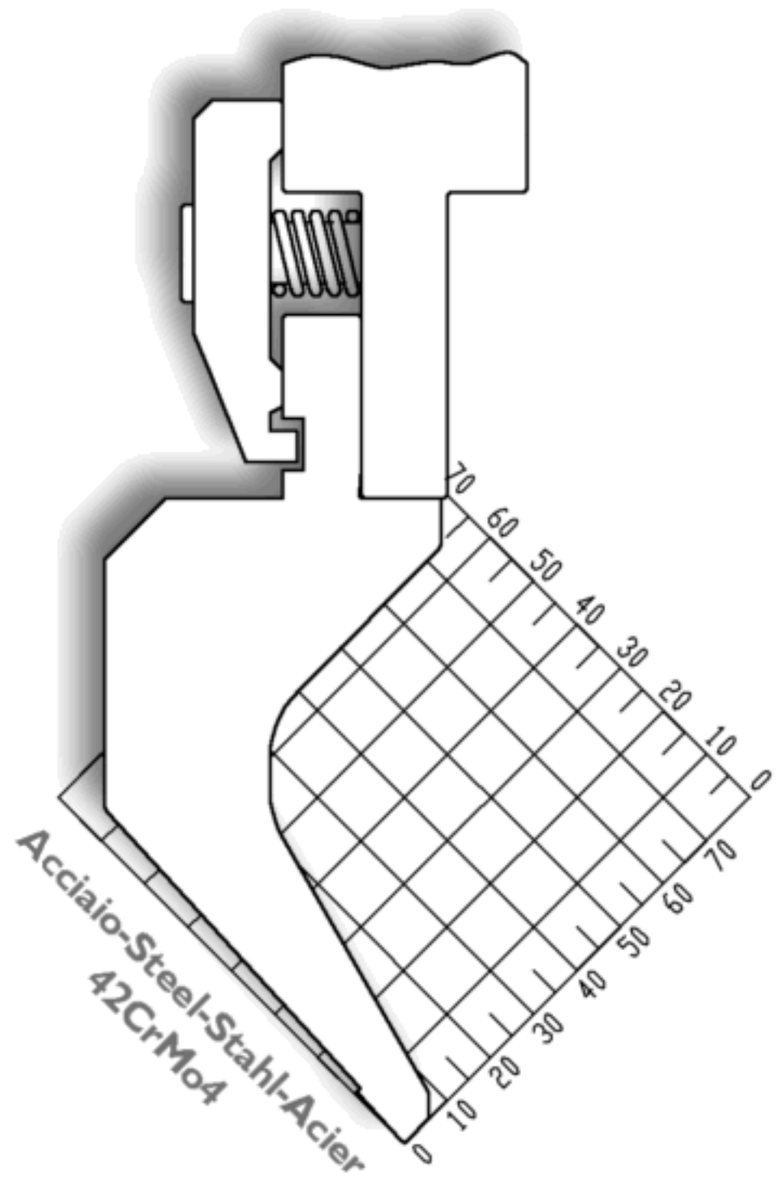

US 129/85°R0,8

max 1000 kN/mt.
l.mm.835-415-Fraz.

BORST Industrievertretungen
Welf Borst
Luikenweg 28
73733 Esslingen

Tel.: 0711 - 370 36 68
Fax: 0711 - 370 36 68
Mobil: 0151 - 11631111
Email: info@welf-borst.de

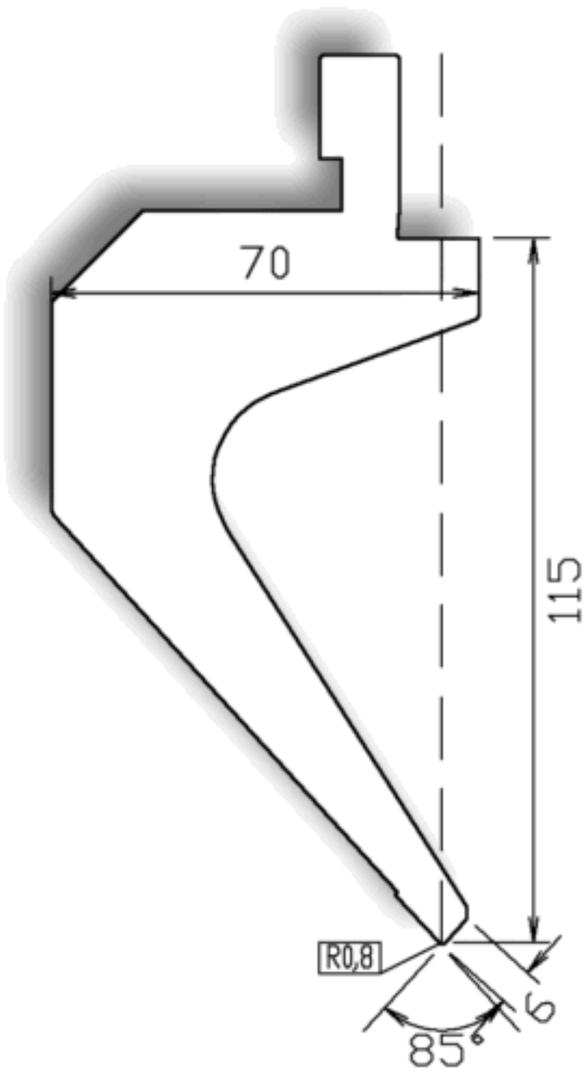

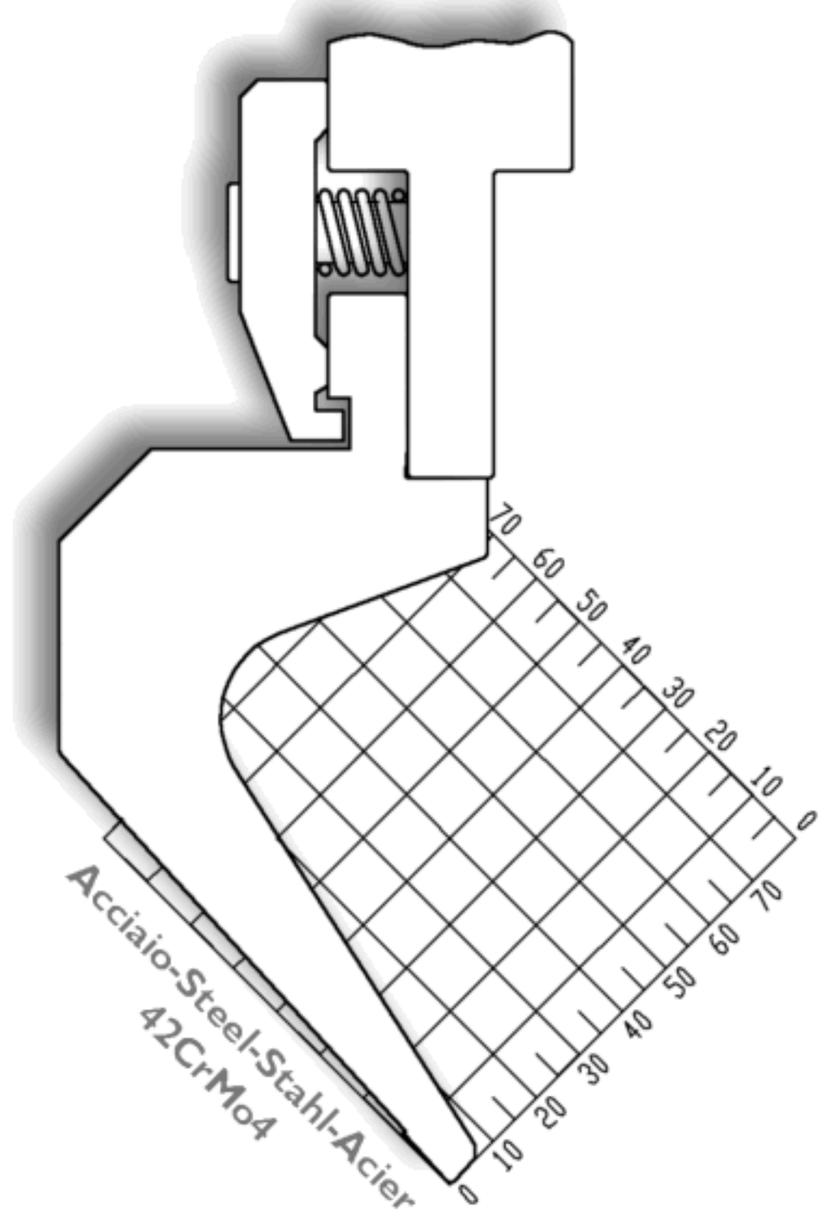

US 141/85°R0,8

max 700 kN/mt.
l.mm.835-415-Fraz.

US07

scala 1:2

BORST Industrievertretungen
Welf Borst
Luikenweg 28
73733 Esslingen

Tel.: 0711 - 370 36 68
Fax: 0711 - 370 36 68
Mobil: 0151 - 11631111
Email: info@welf-borst.de

BORST Industrievertretungen
Welf Borst
Luikenweg 28
73733 Esslingen
Tel.: 0711 - 370 36 68
Fax: 0711 - 370 36 68

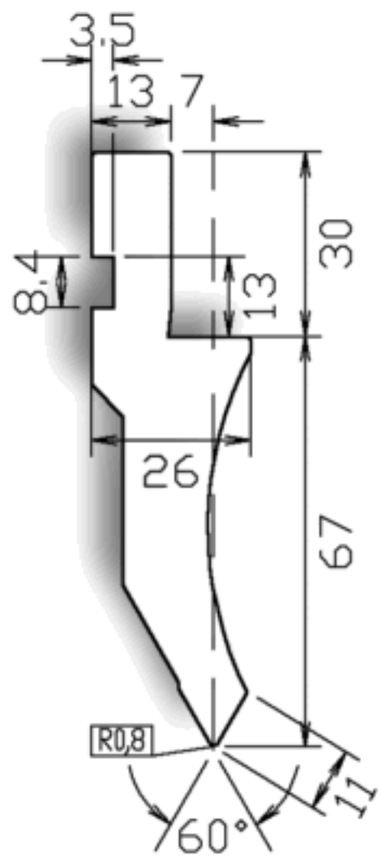

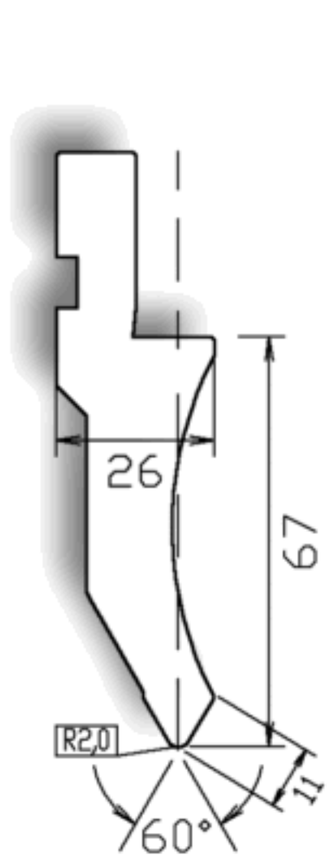

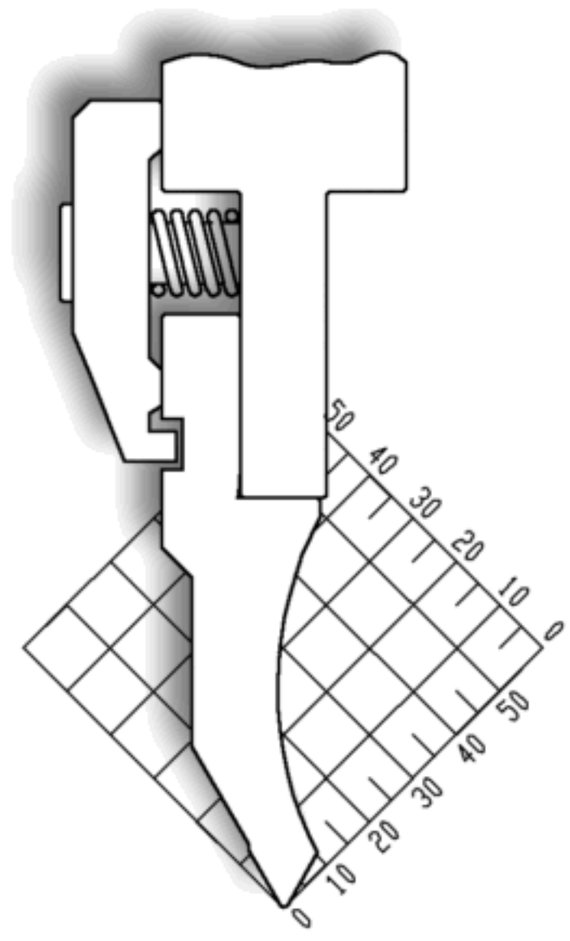

US 124/60°R0,8 **US 124/60°R2,0,** **max 800 kN/mt.**
l.mm.835-415-Fraz.

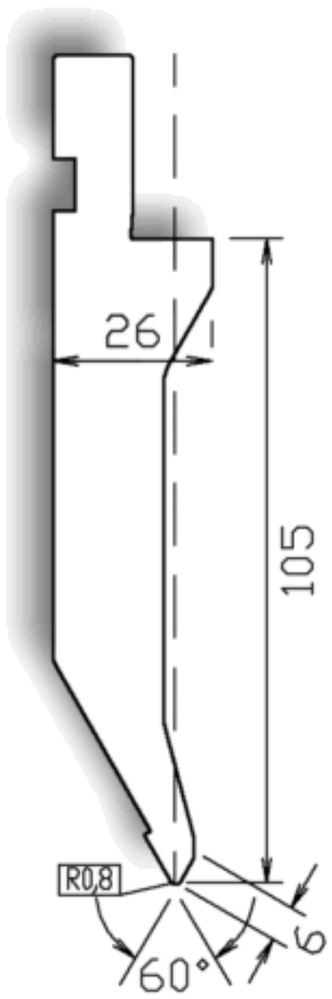

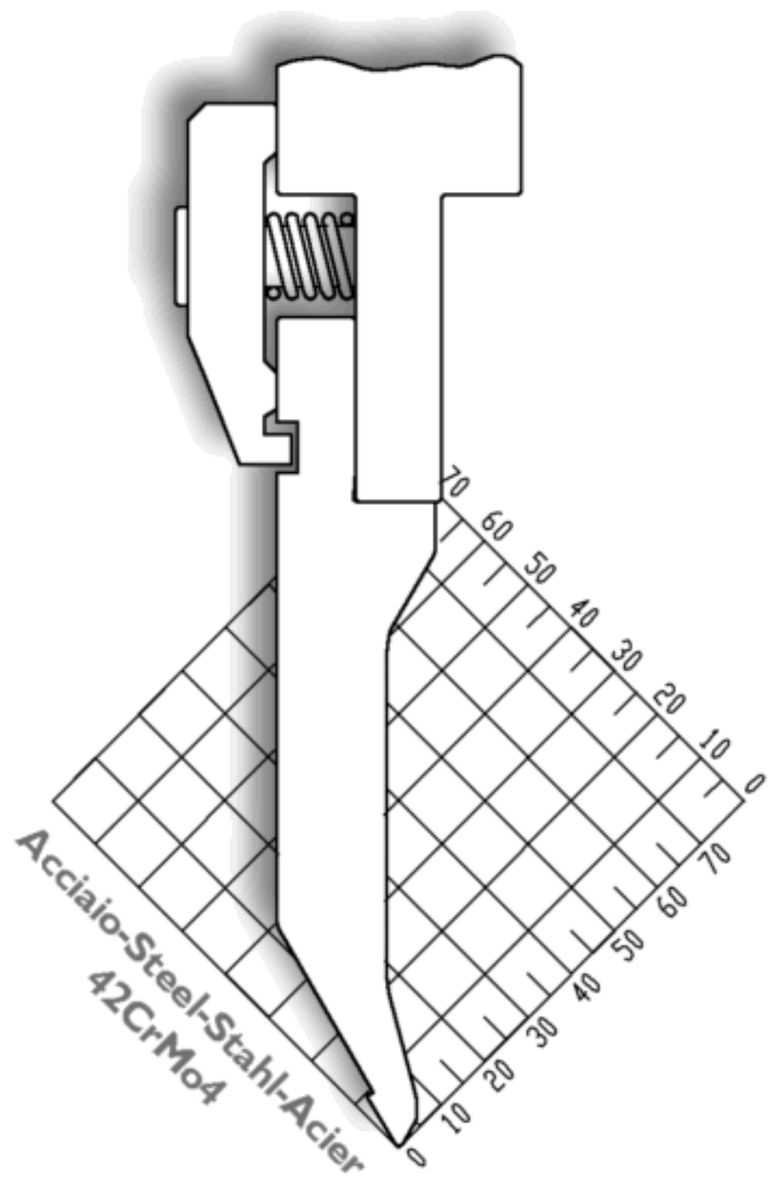

US08

US 128/60°R0,8 **max 800 kN/mt.**
l.mm.835-415-Fraz.

scala 1:2

BORST Industrievertretungen
Welf Borst
Luikenweg 28
73733 Esslingen

Tel.: 0711 - 370 36 68
Fax: 0711 - 370 36 68
Mobil: 0151 - 11631111
Email: info@welf-borst.de

60°

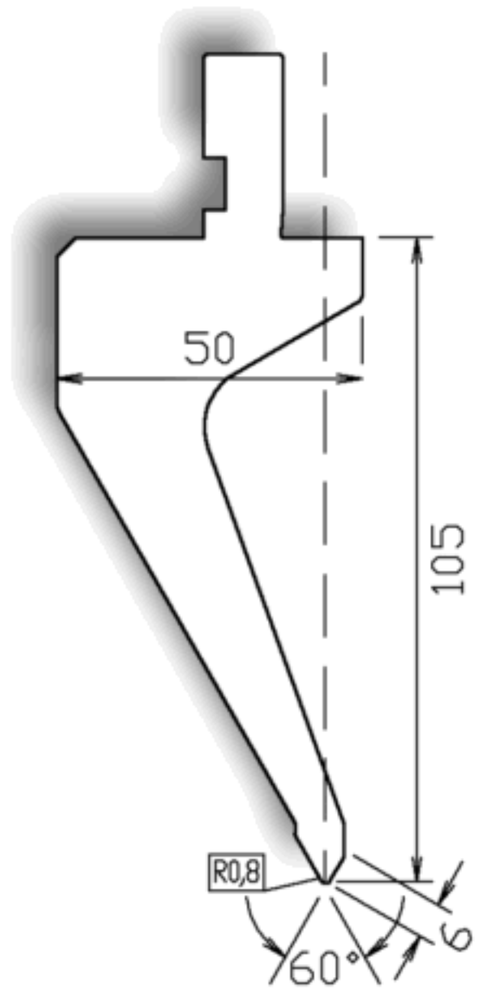

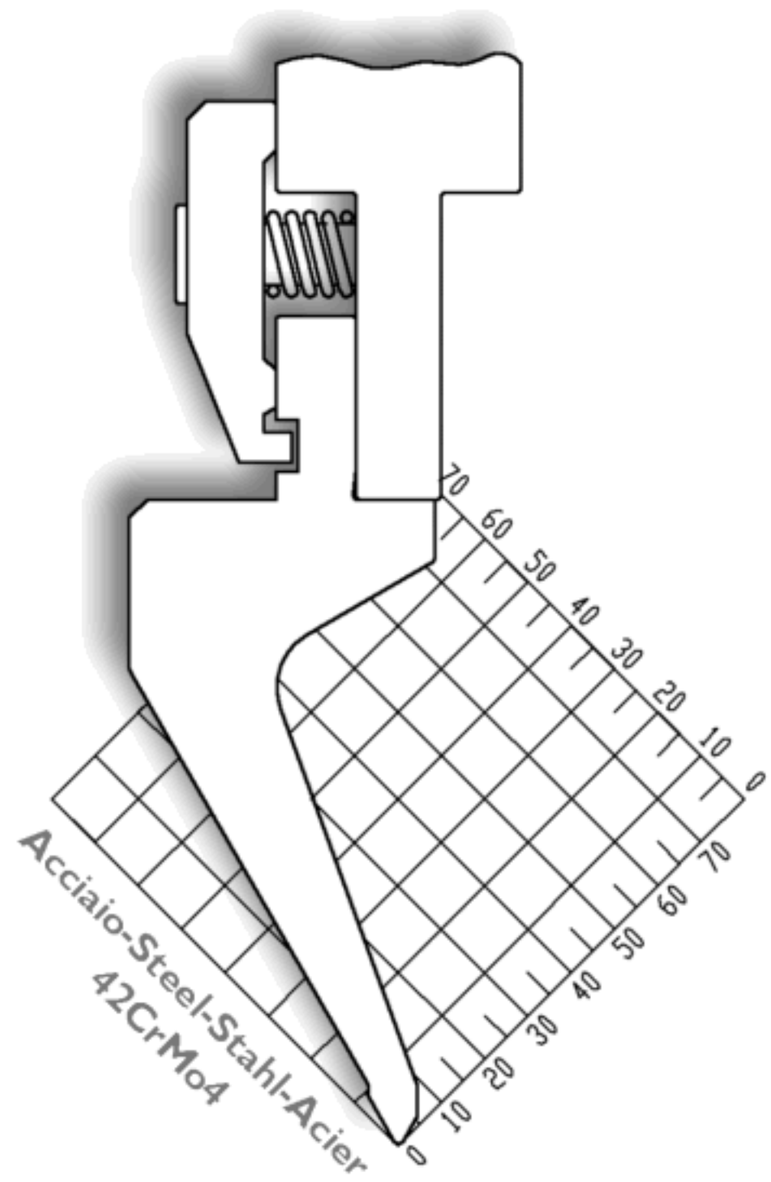

US 132/60°R0,8

max 700 kN/mt.
l.mm.835-415-Fraz.

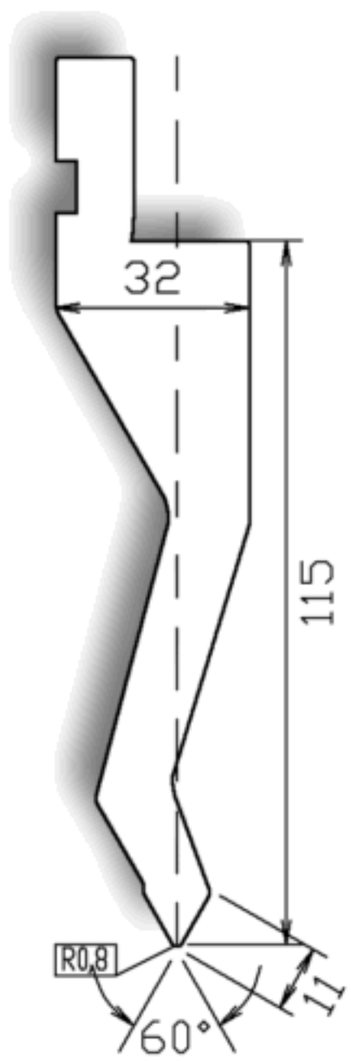

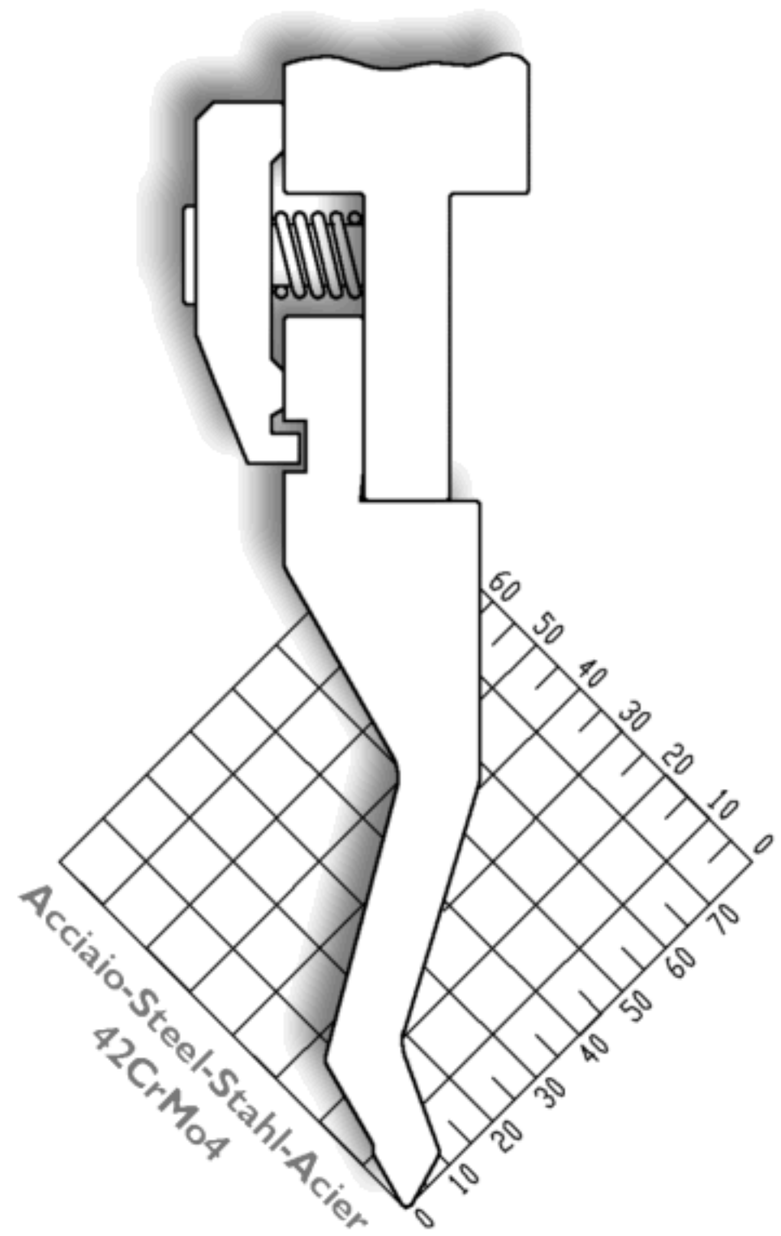

US 134/60°R0,8

max 700 kN/mt.
l.mm.835-415-Fraz.

US09

scala 1:2

60°

BORST Industrievertretungen
Welf Borst
Luikenweg 28
73733 Esslingen
Tel.: 0711 - 370 36 68
Fax: 0711 - 370 36 68

BORST Industrievertretungen
Welf Borst
Luikenweg 28
73733 Esslingen

Tel.: 0711 - 370 36 68
Fax: 0711 - 370 36 68
Mobil: 0151 - 11631111
Email: info@welf-borst.de

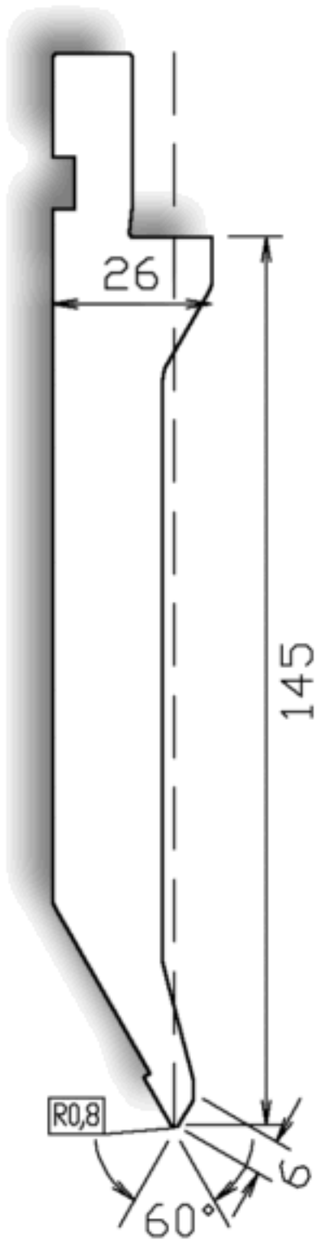

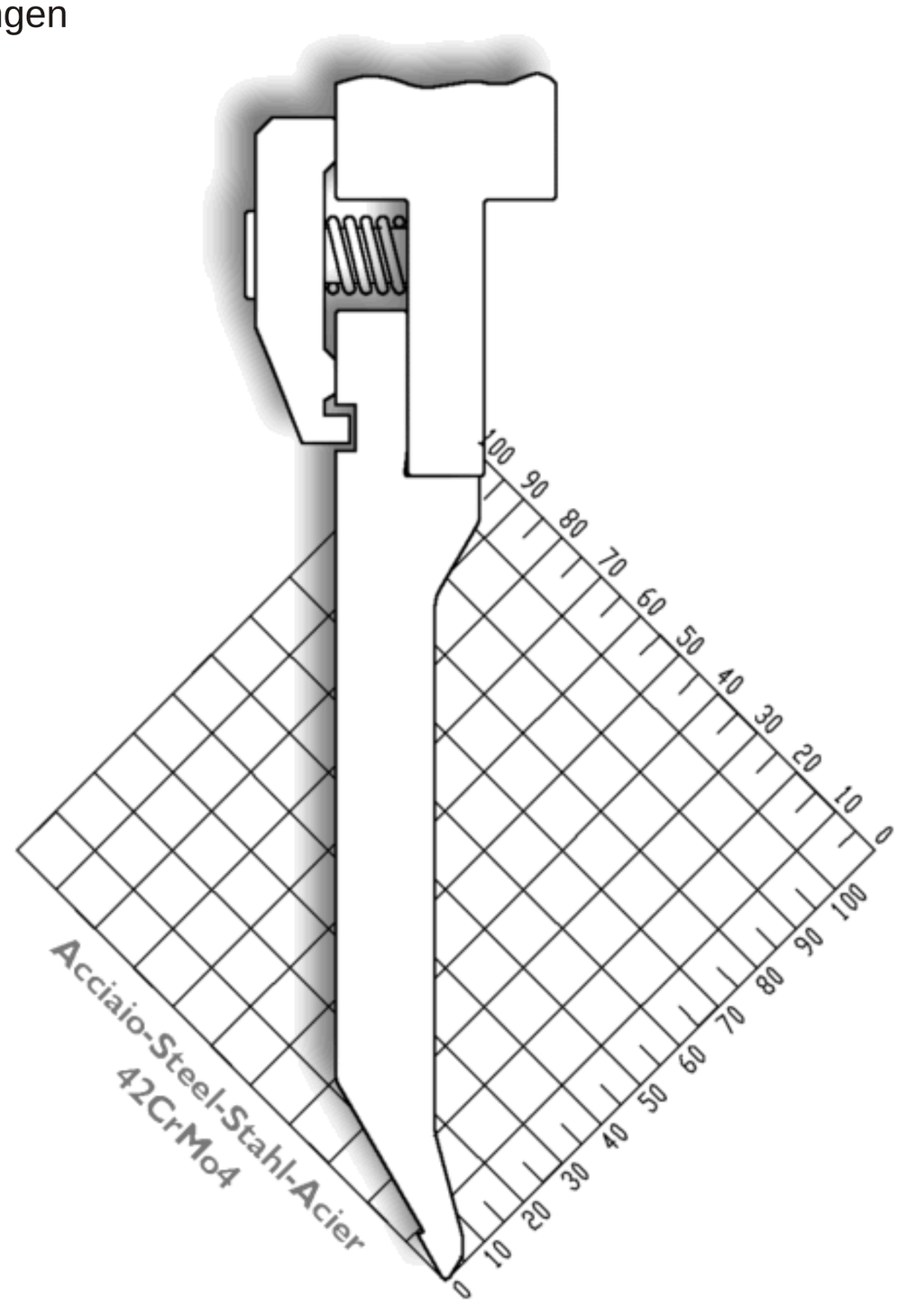

US 135/60°R0,8

max 800 kN/mt.
l.mm.835-415-Fraz.

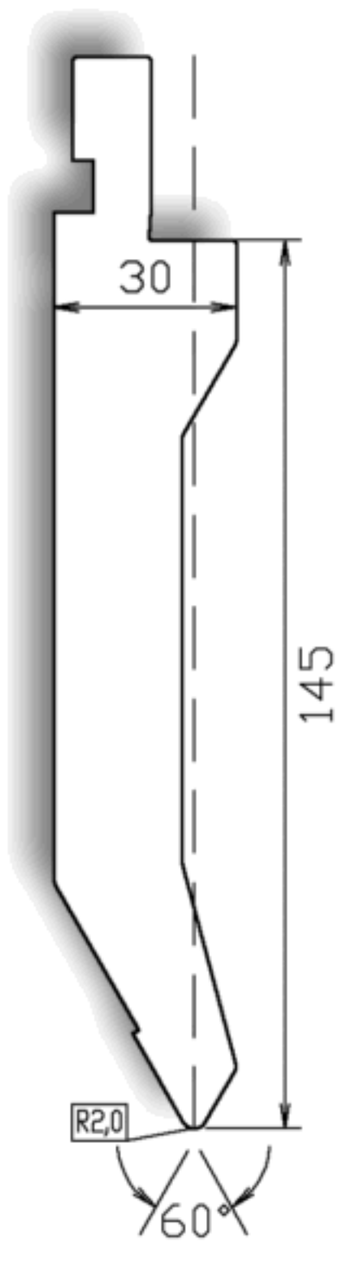

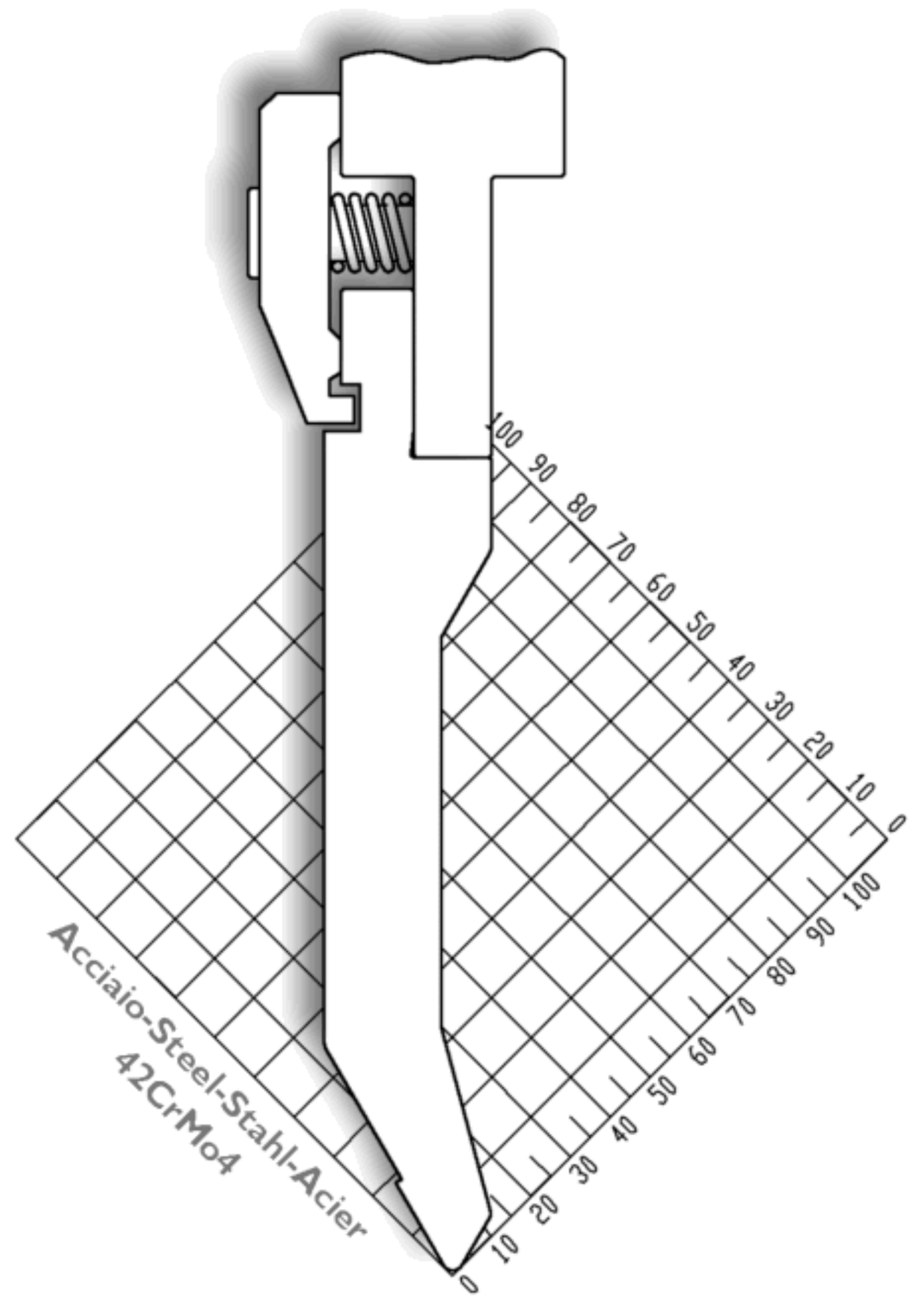

US10

scala 1:2

US 136/60°R2,0

max 1000 kN/mt.
l.mm.835-415-Fraz.

BORST Industrievertretungen
Welf Borst
Luikenweg 28
73733 Esslingen

Tel.: 0711 - 370 36 68
Fax: 0711 - 370 36 68
Mobil: 0151 - 11631111
Email: info@welf-borst.de

45°

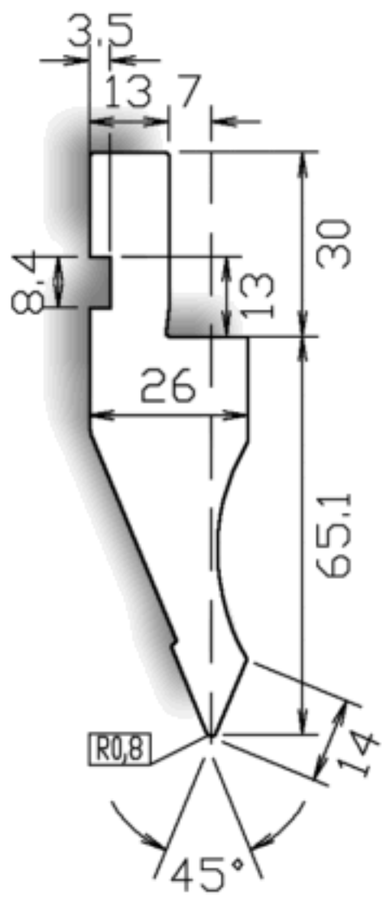

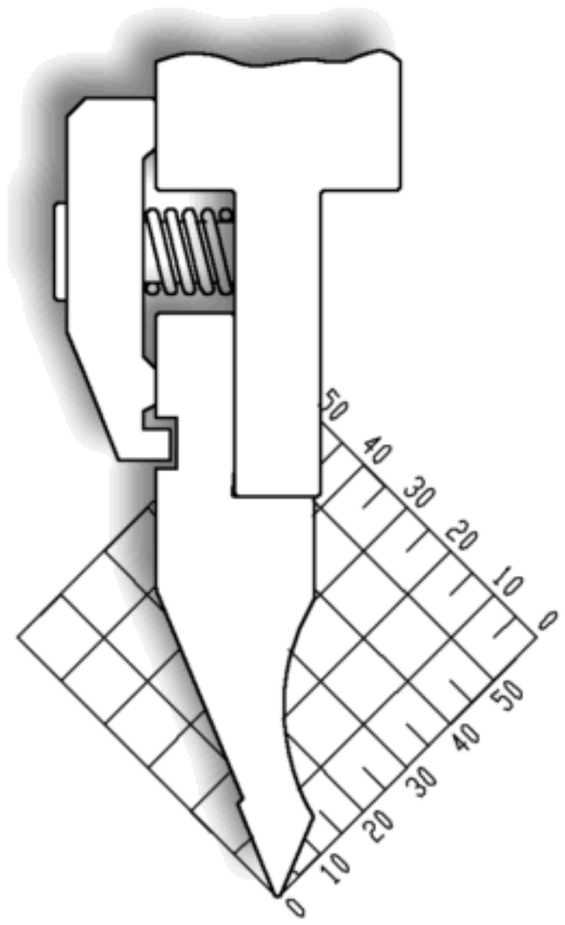

US 111/45°R0,8

max 800 kN/mt.
l.mm.835-415-Fraz.

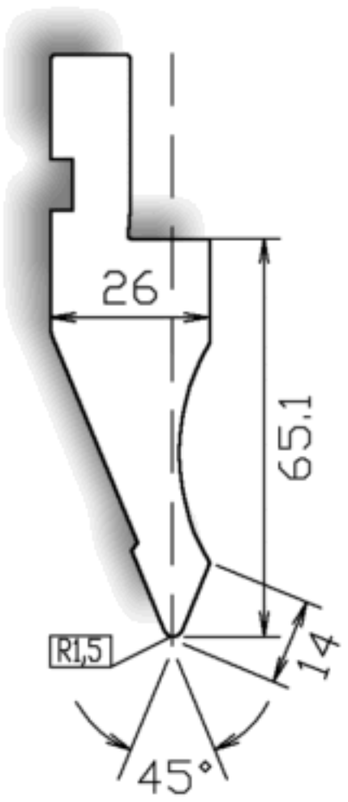

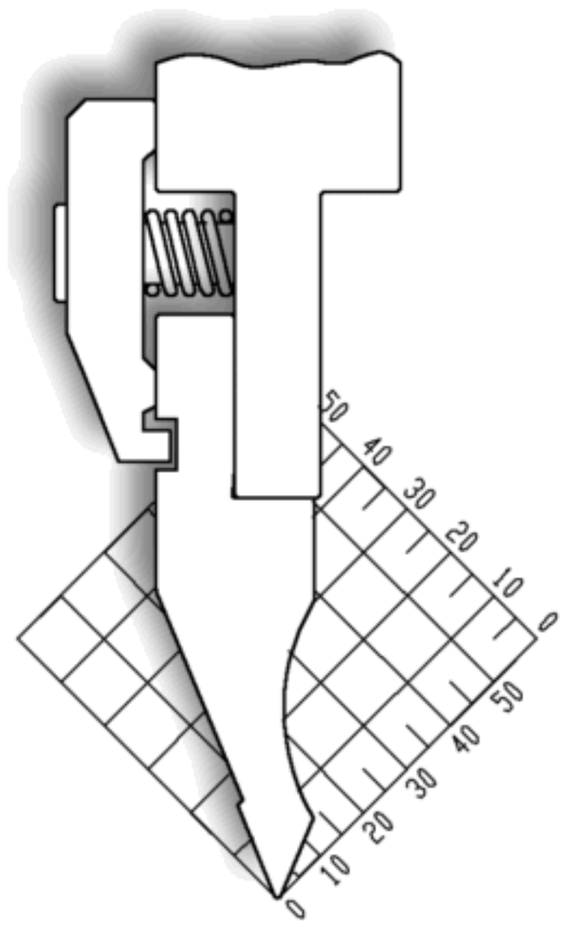

US 111/45°R1,5

max 800 kN/mt.
l.mm.835-415-Fraz.

US11

scala 1:2

35°

BORST Industrievertretungen
Welf Borst
Luikenweg 28
73733 Esslingen
Tel.: 0711 - 370 36 68
Fax: 0711 - 370 36 68

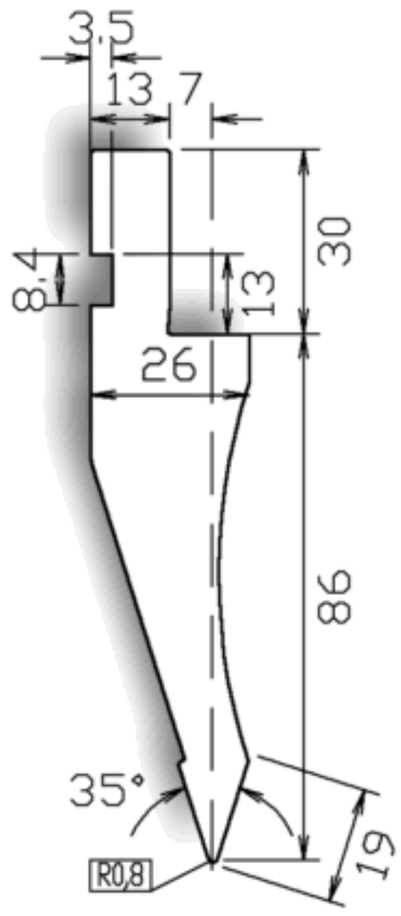

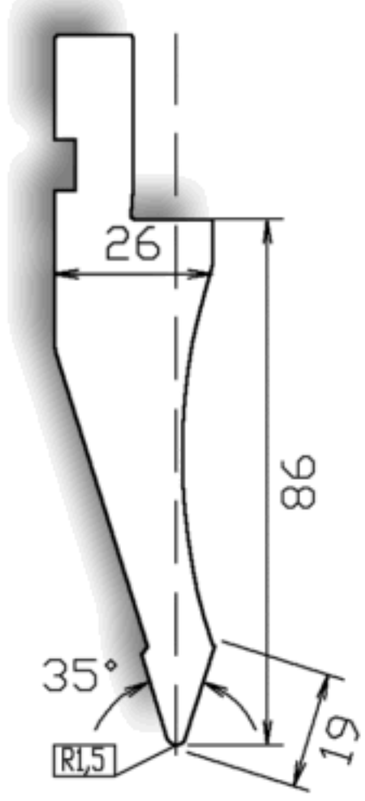

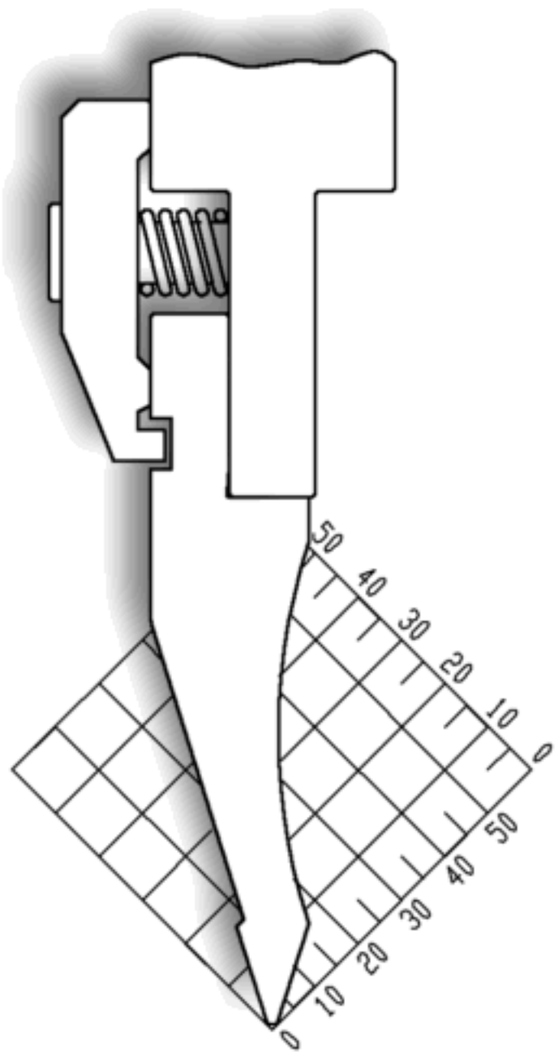

US 112/35°R0,8 **US 112/35°R1,5** **max 700 kN/mt.**
l.mm.835-415-Fraz.

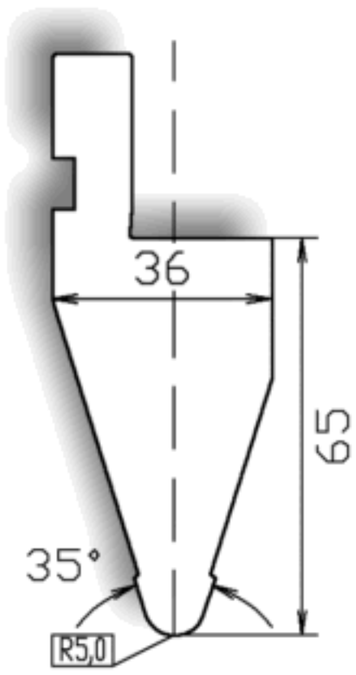

BORST Industrievertretungen
Welf Borst
Luikenweg 28
73733 Esslingen

Tel.: 0711 - 370 36 68
Fax: 0711 - 370 36 68
Mobil: 0151 - 11631111
Email: info@welf-borst.de

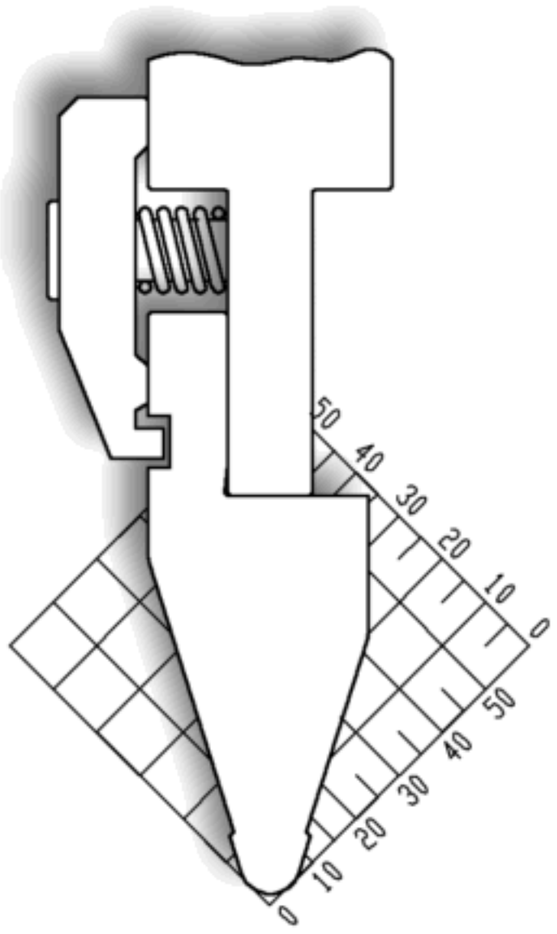

US 113/35°R5,0 **max 1000 kN/mt.**
l.mm.835-415-Fraz.

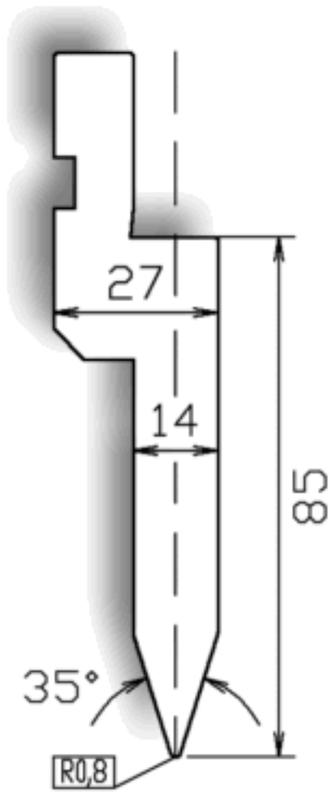

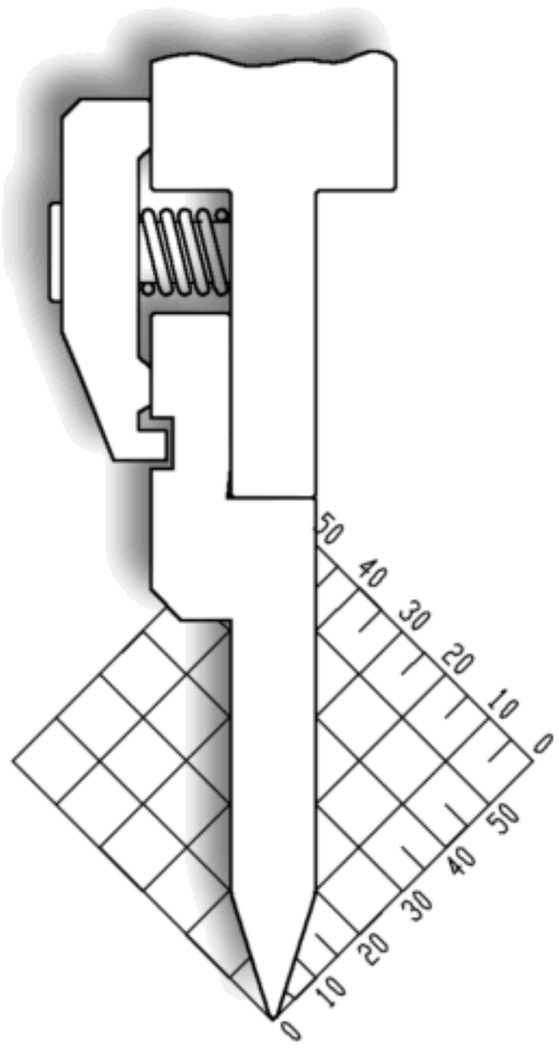

US12

US 131/35°R0,8 **max 1000 kN/mt.**
l.mm.835-415-Fraz.

scala 1:2

BORST Industrievertretungen
Welf Borst
Luikenweg 28
73733 Esslingen

Tel.: 0711 - 370 36 68
Fax: 0711 - 370 36 68
Mobil: 0151 - 11631111
Email: info@welf-borst.de

30°

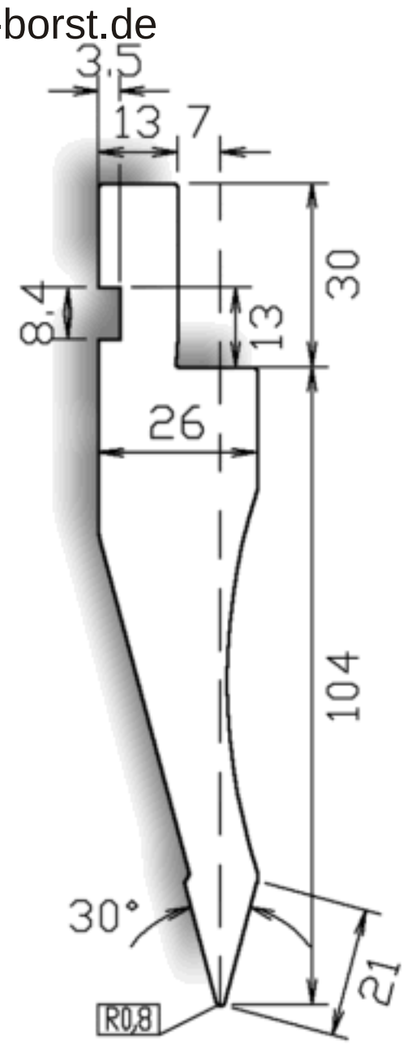

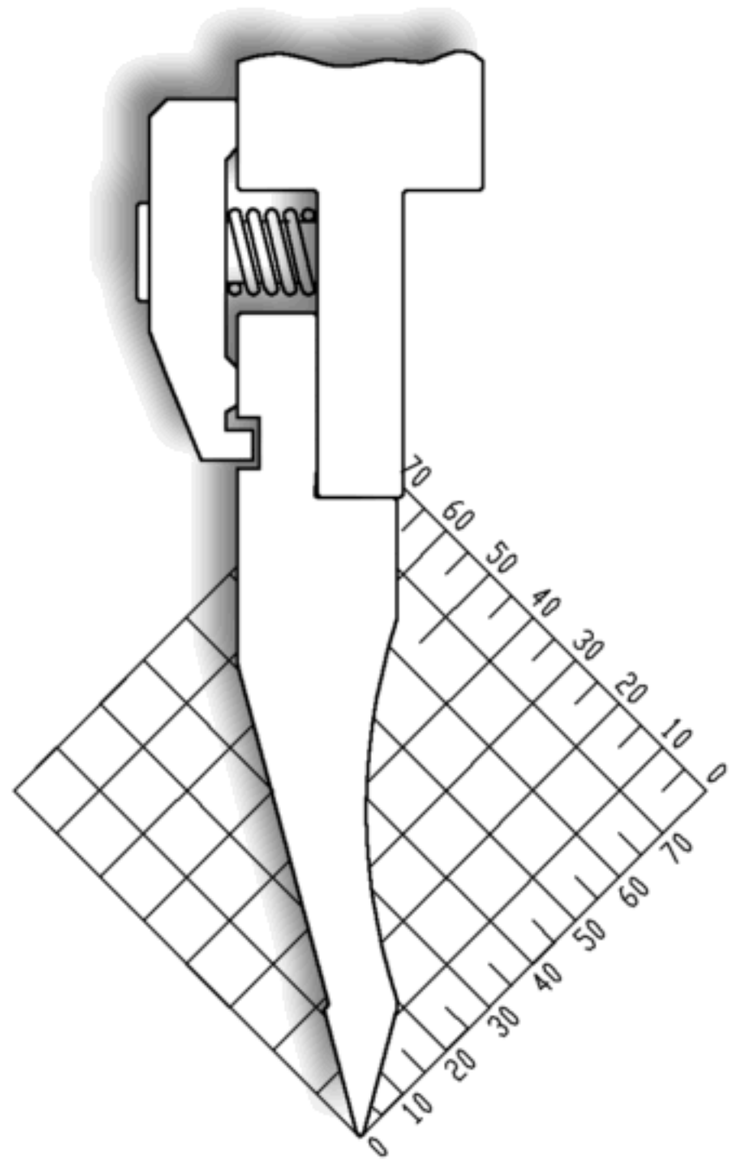

US 133/30°R0,8

max 700 kN/mt.
l.mm.835-415-Fraz.

26°

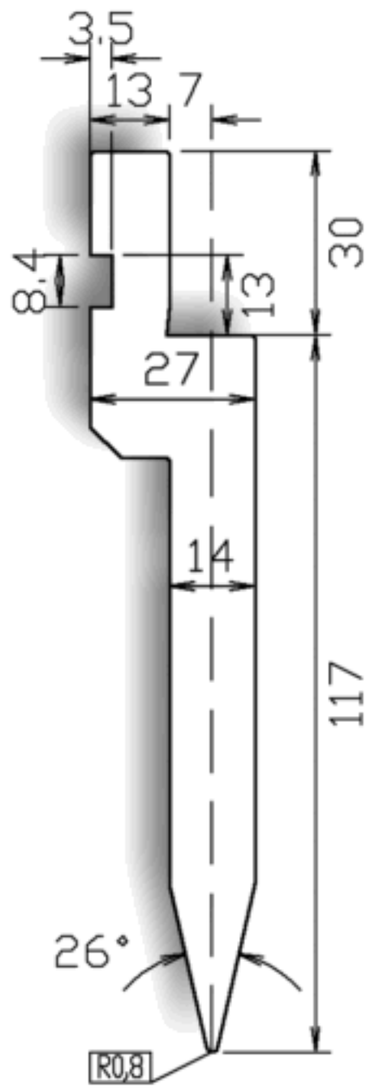

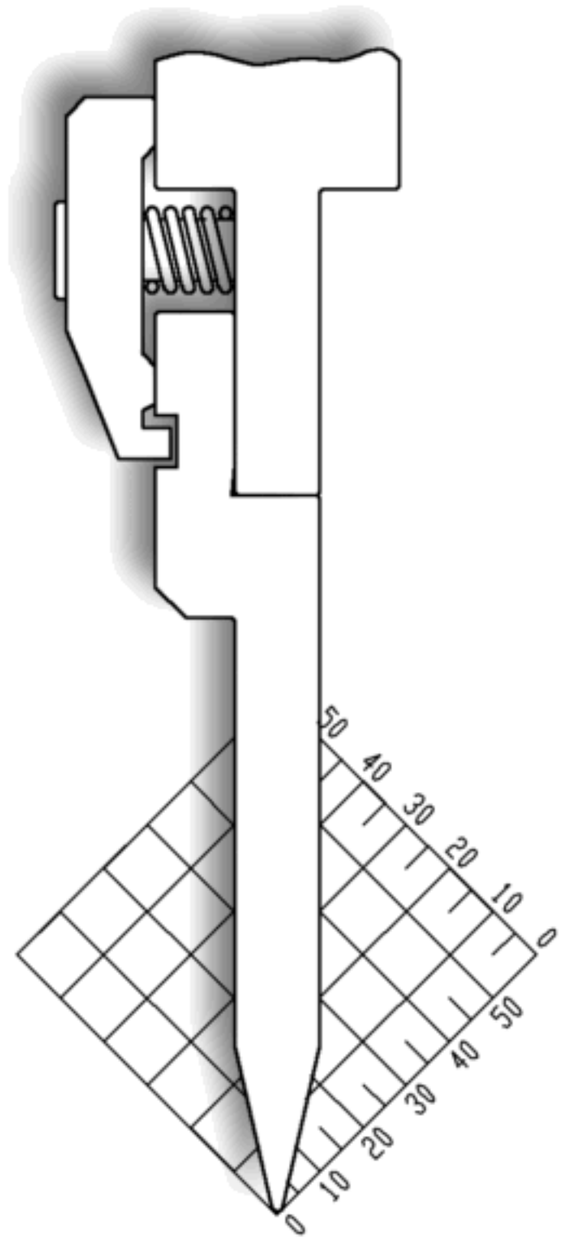

US 122/26° R0,8

max 1000 kN/mt.
l.mm.835-415-Fraz.

US13

scala 1:2

BORST Industrievertretungen
Welf Borst
Luikenweg 28
73733 Esslingen

Tel.: 0711 - 370 36 68
Fax: 0711 - 370 36 68
Mobil: 0151 - 11631111
Email: info@welf-borst.de

26°

BORST Industrievertretungen
Welf Borst
Luikenweg 28
73733 Esslingen
Tel.: 0711 - 370 36 68
Fax: 0711 - 370 36 68

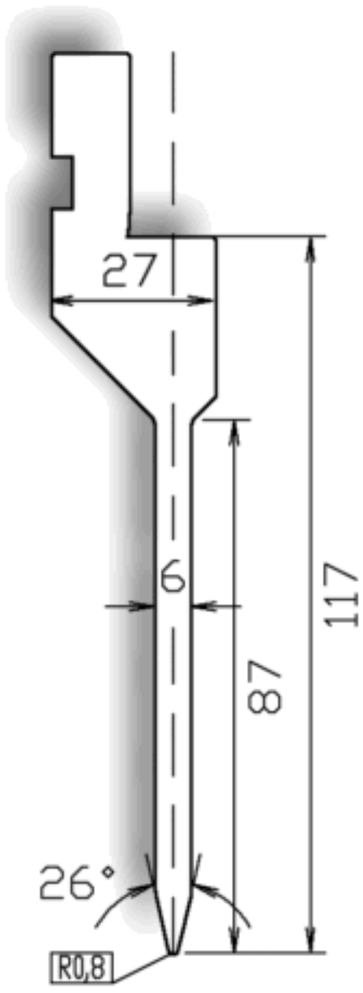

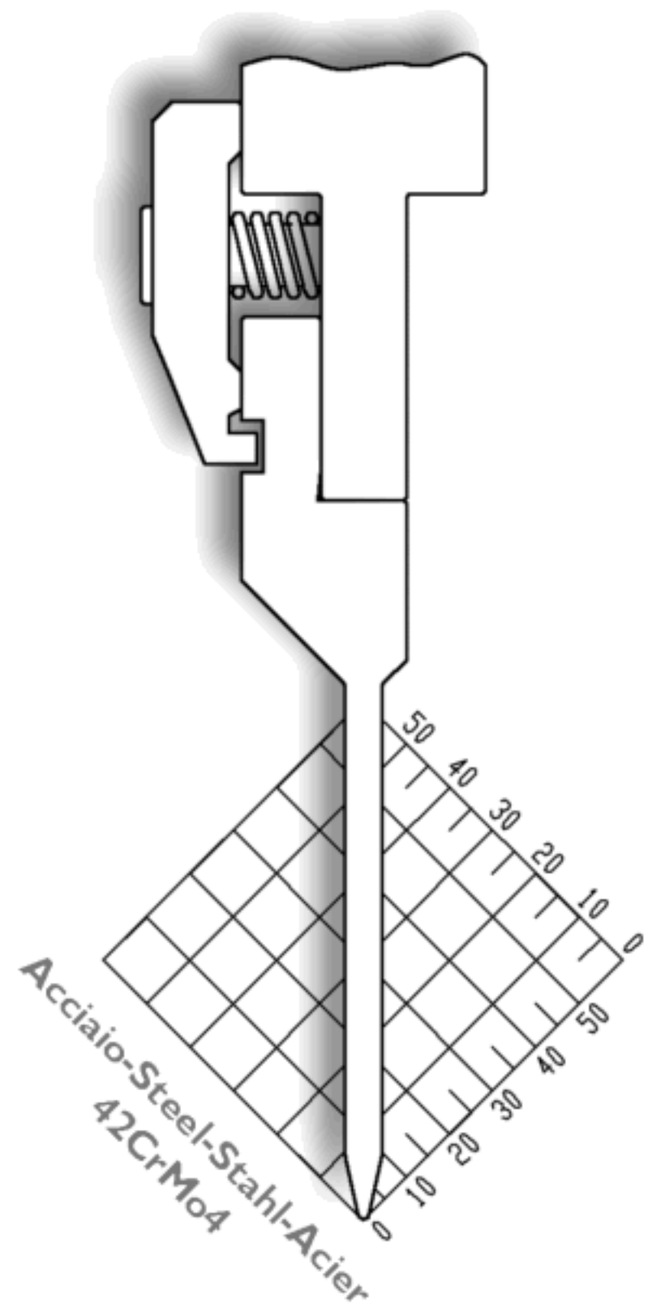

US 137/26°R0,8

max 500 kN/mt.
l.mm.835-415-Fraz.

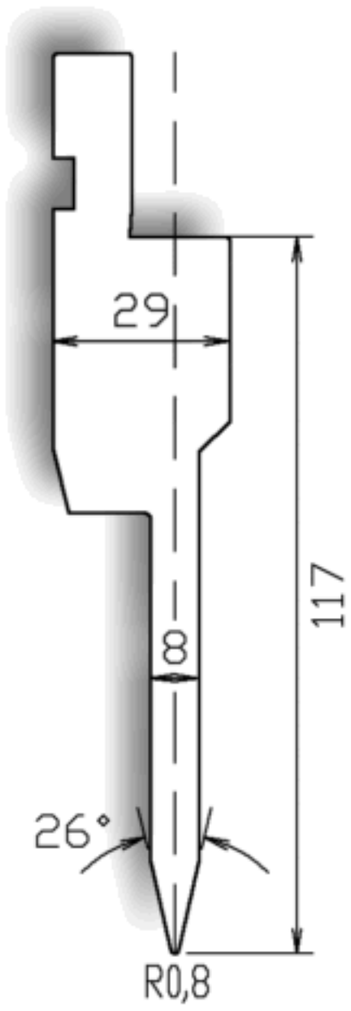

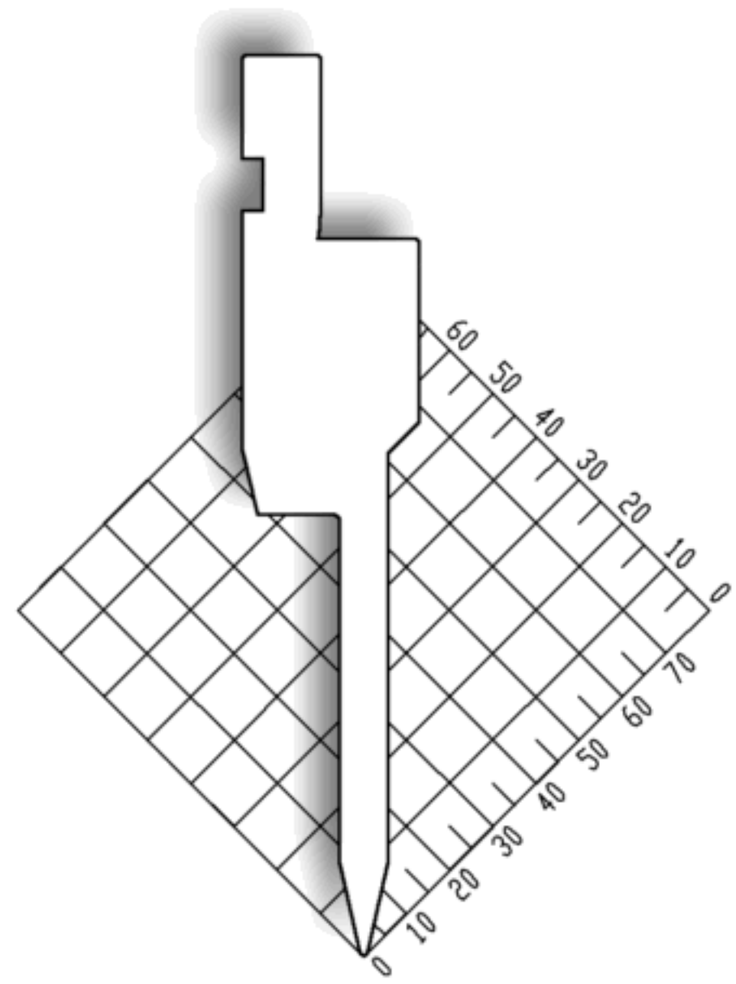

US14

scala 1:2

US 138/26°R0,8-DUO

max 800 kN/mt.
l.mm.835-415-Fraz.

26°

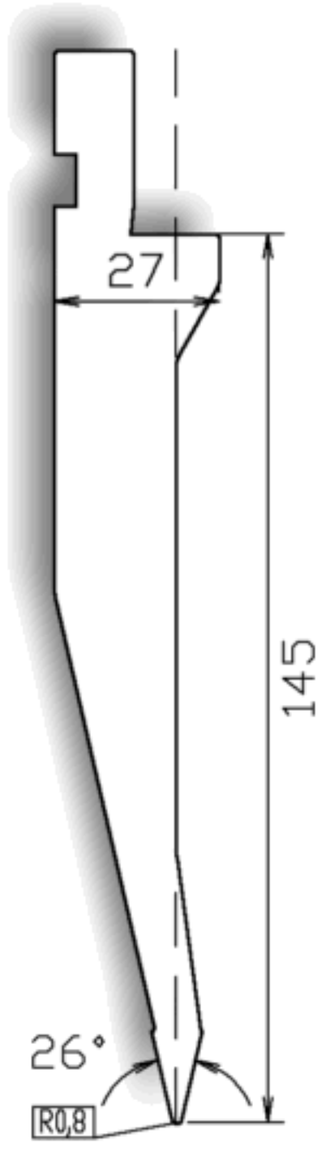

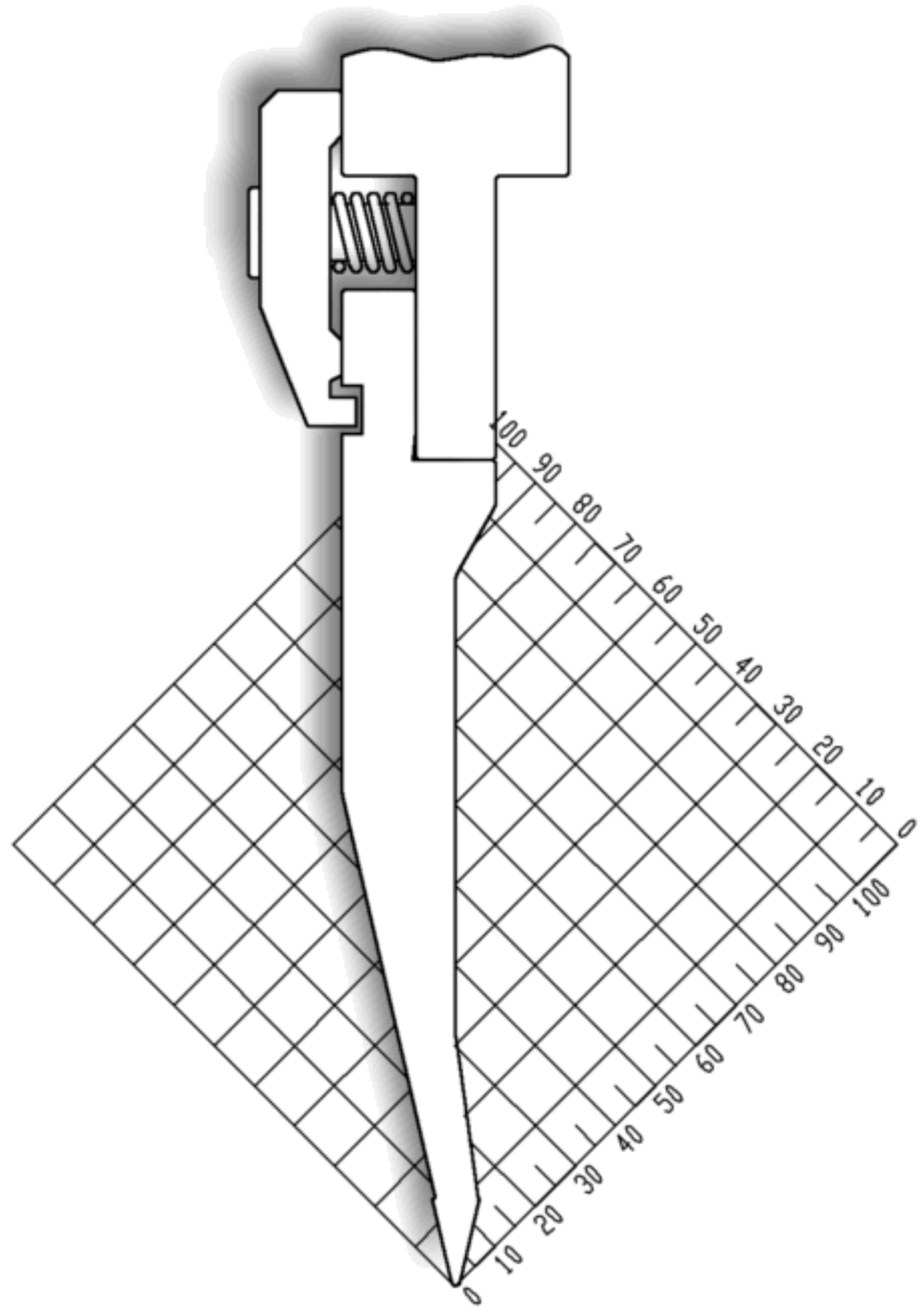

US 139/26°R0,8

max 1000 kN/mt.
l.mm.835-415-Fraz.

BORST Industrievertretungen
Welf Borst
Luikenweg 28
73733 Esslingen

Tel.: 0711 - 370 36 68
Fax: 0711 - 370 36 68
Mobil: 0151 - 11631111
Email: info@welf-borst.de

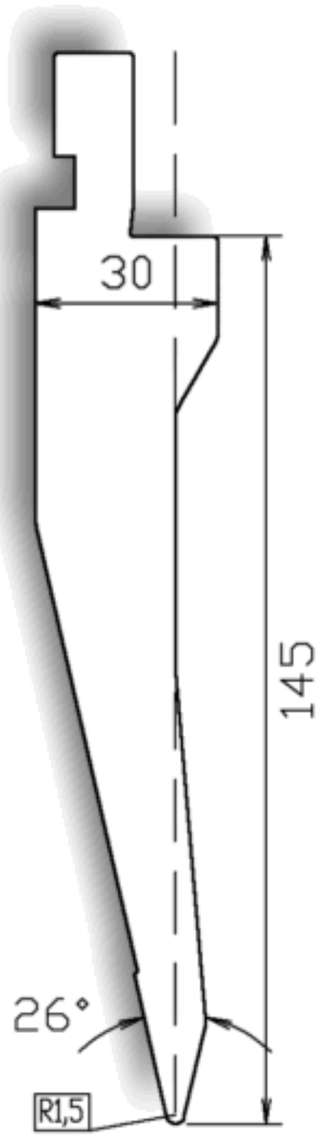

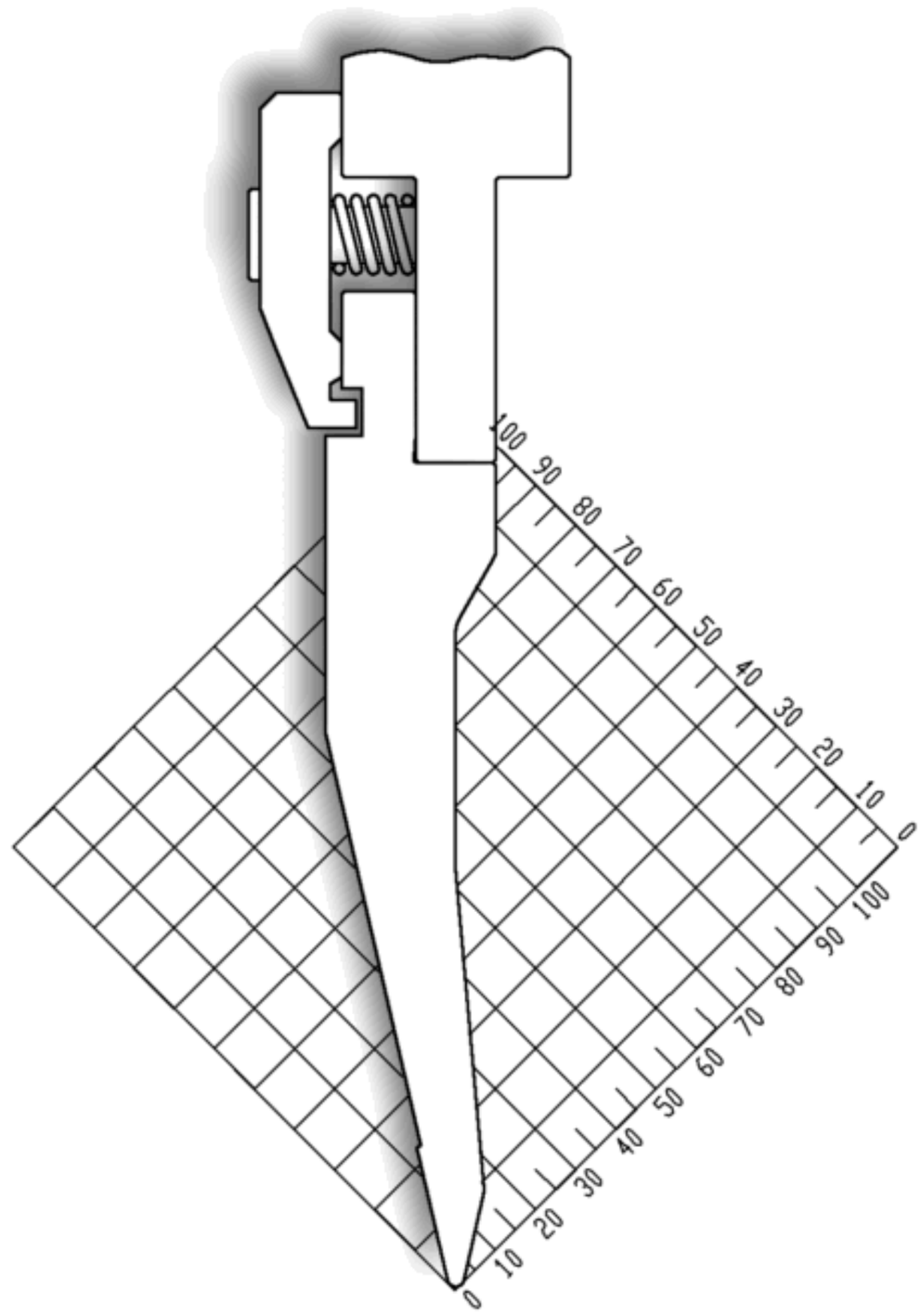

US 140/26°R1,5

max 1000 kN/mt.
l.mm.835-415-Fraz.

US15

scala 1:2

BORST Industrievertretungen
Welf Borst
Luikenweg 28
73733 Esslingen

Tel.: 0711 - 370 36 68
Fax: 0711 - 370 36 68
Mobil: 0151 - 11631111
Email: info@welf-borst.de

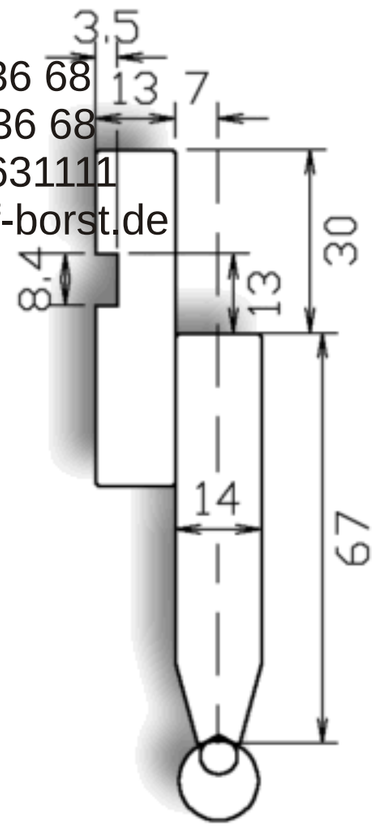

US 305/R.3,0

US 305/R.3,5

US 305/R.4,0

US 305/R.4,5

US 305/R.5,0

US 305/R.5,5

US 305/R.6,0

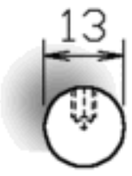

US 305/R.6,5

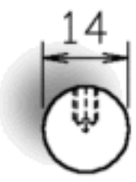

US 305/R.7,0

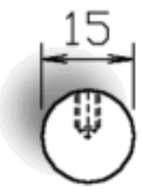

US 305/R.7,5

US 118
l.mm.835-415

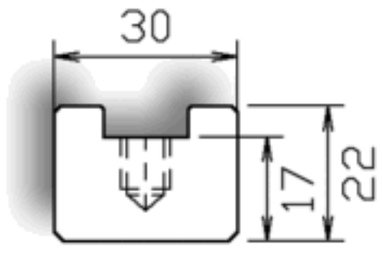

US 310

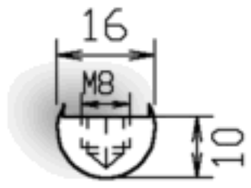

US 305/R.8

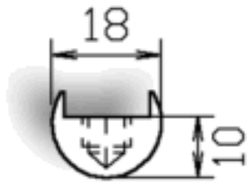

US 305/R.9

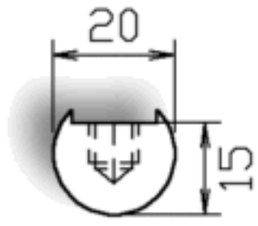

US 305/R.10

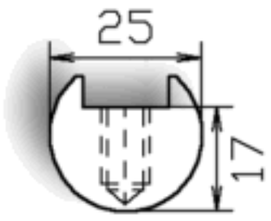

US 305/R.12,5

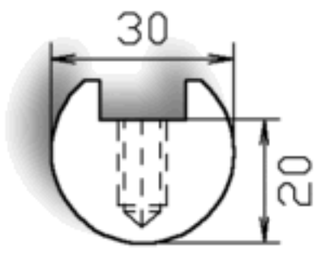

US 305/R.15

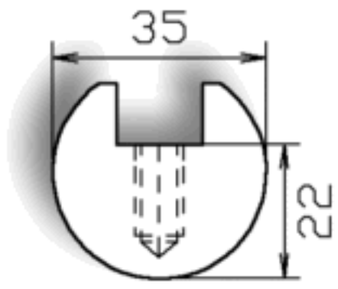

US 305/R.17,5

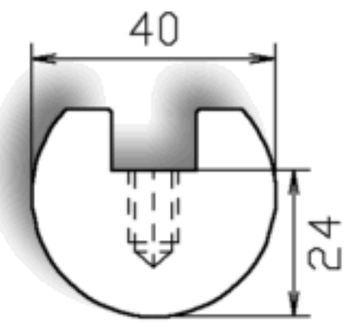

US 305/R.20

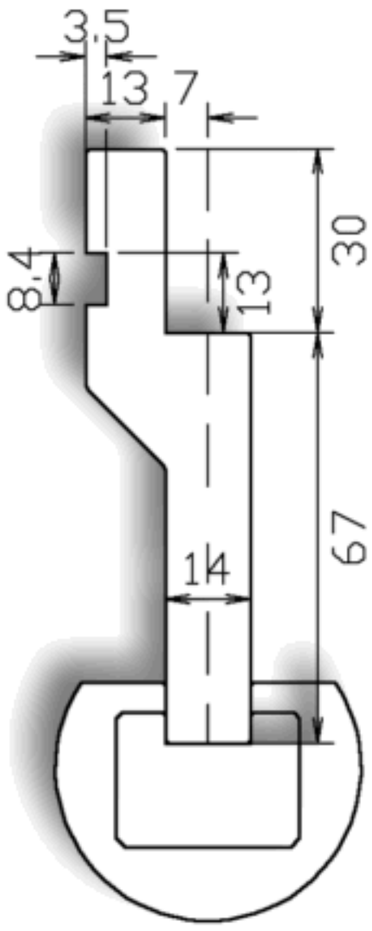

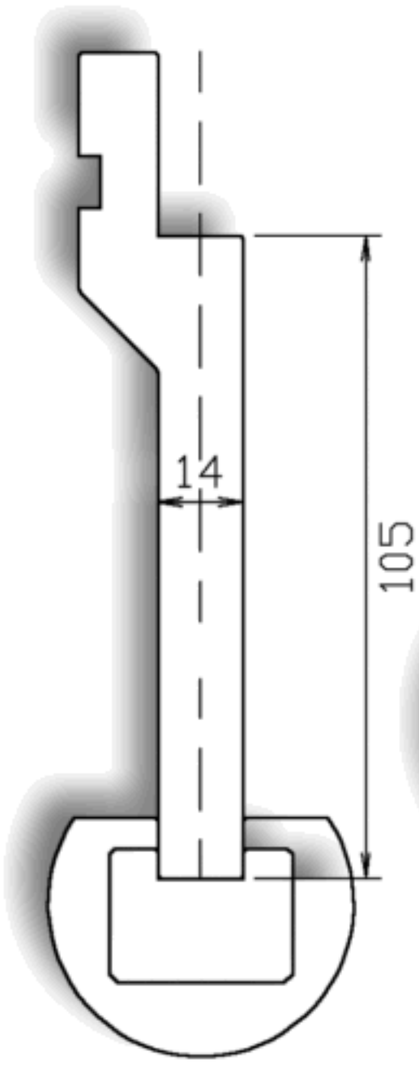

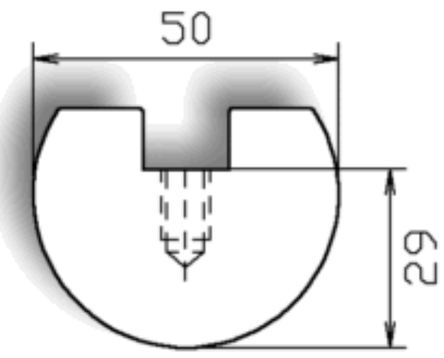

US 305/R.25

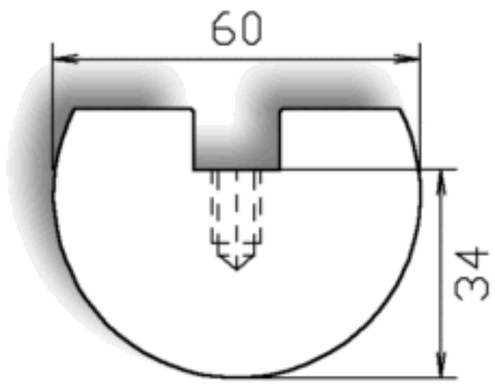

US 305/R.30

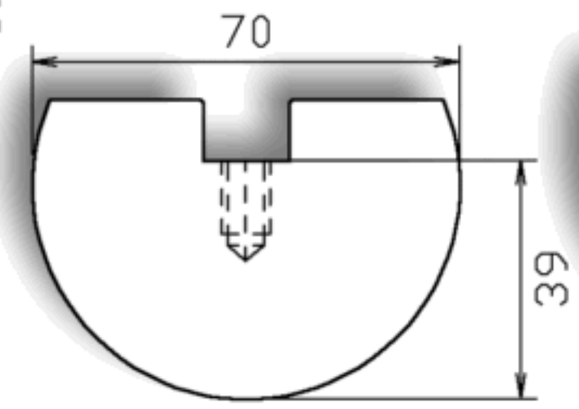

US 305/R.35

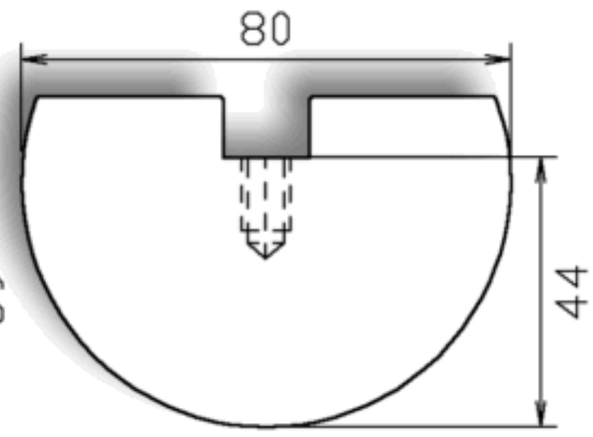

US 305/R.40

scala 1:2

US 119h.67
l.mm.835-415

US 119h.105
l.mm.835-415

BORST Industrievertretungen
Welf Borst
Luikenweg 28
73733 Esslingen

Tel.: 0711 - 370 36 68
Fax: 0711 - 370 36 68
Mobil: 0151 - 11631111
Email: info@welf-borst.de

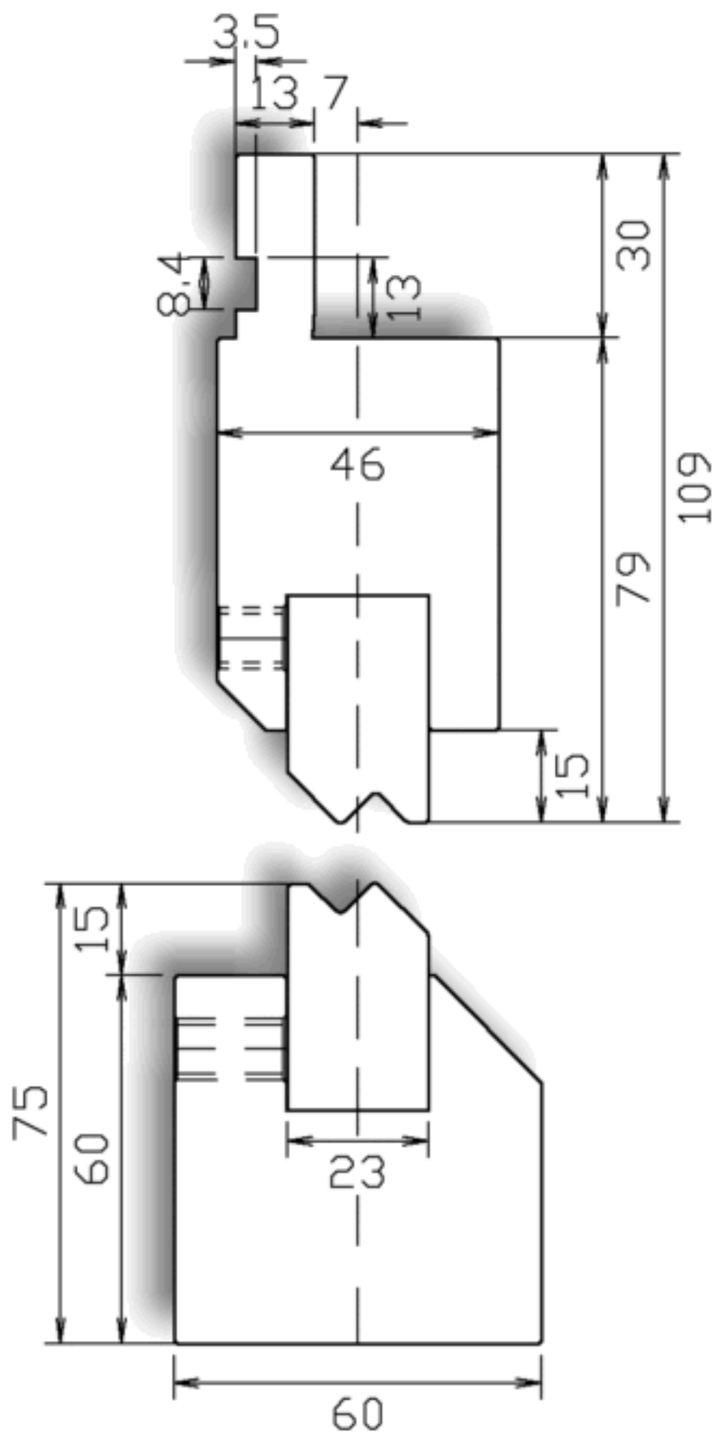

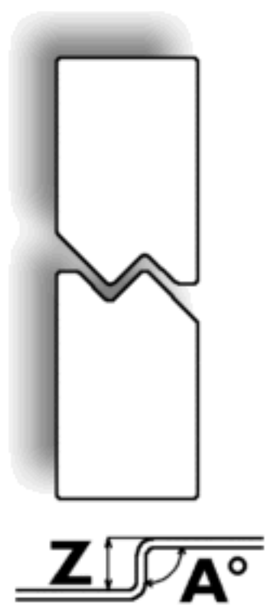

Z A°	Z	A°
US 131/1,0	mm.1,0	160°
US 131/1,5	mm.1,5	160°
US 131/2,0	mm.2,0	150°
US 131/2,5	mm.2,5	140°
US 131/3,0	mm.3,0	90°
US 131/3,5	mm.3,5	90°
US 131/4,0	mm.4,0	90°
US 131/4,5	mm.4,5	90°
US 131/5,0	mm.5,0	90°
US 131/5,5	mm.5,5	90°
US 131/6,0	mm.6,0	90°
US 131/6,5	mm.6,5	90°
US 131/7,0	mm.7,0	90°
US 131/7,5	mm.7,5	90°
US 131/8,0	mm.8,0	90°

US 130
l.mm.835-415

US 131
l.mm.835-415

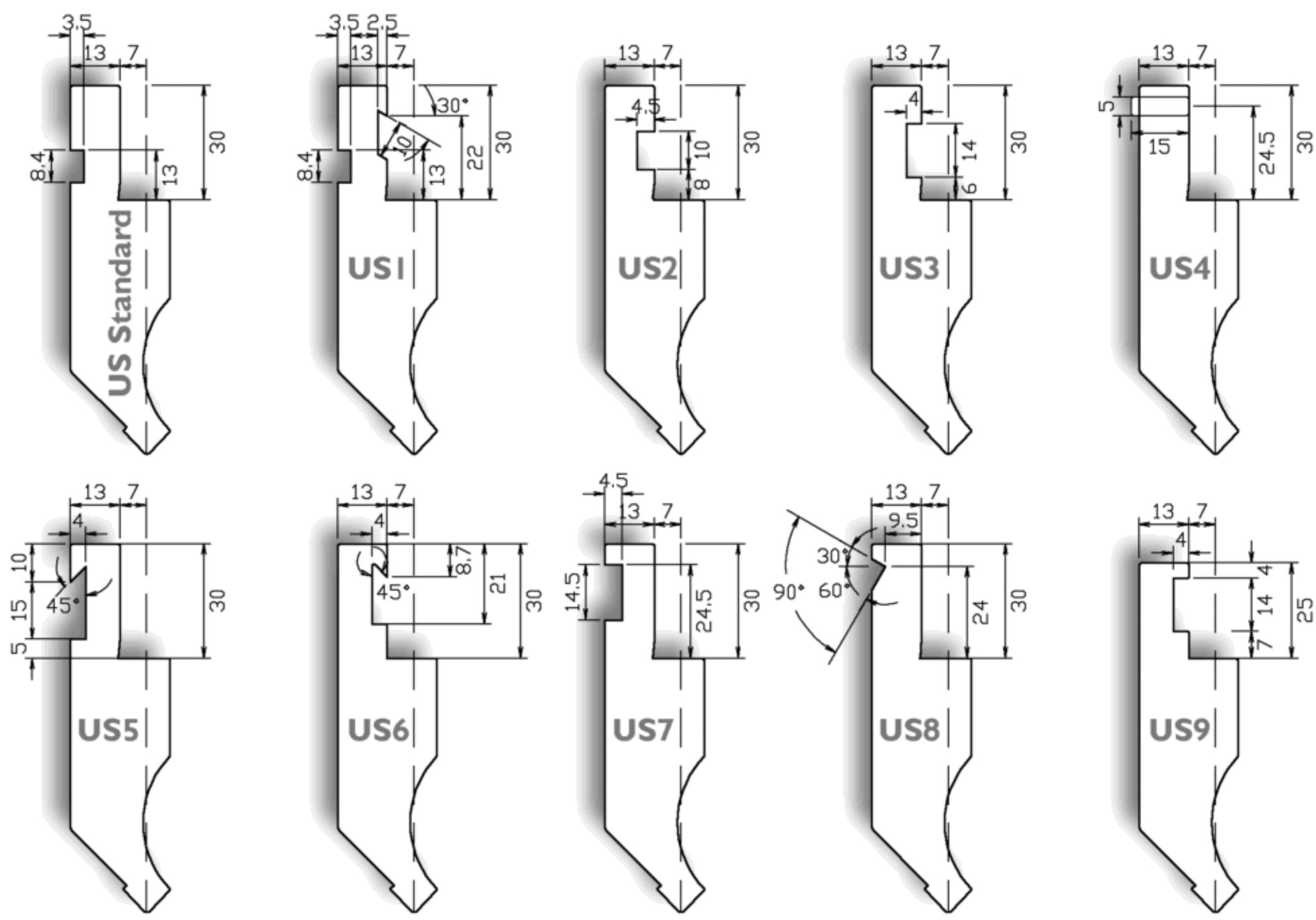

Attacchi speciali - Special clampings - Spezielle aufnahmen - Calages spécials

US17

scala 1:2

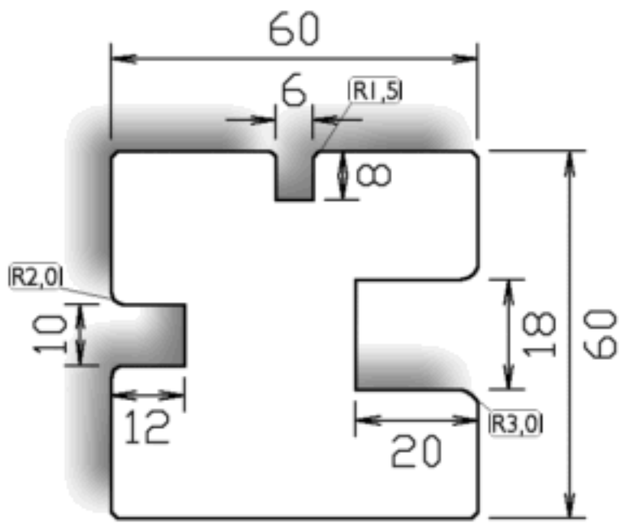

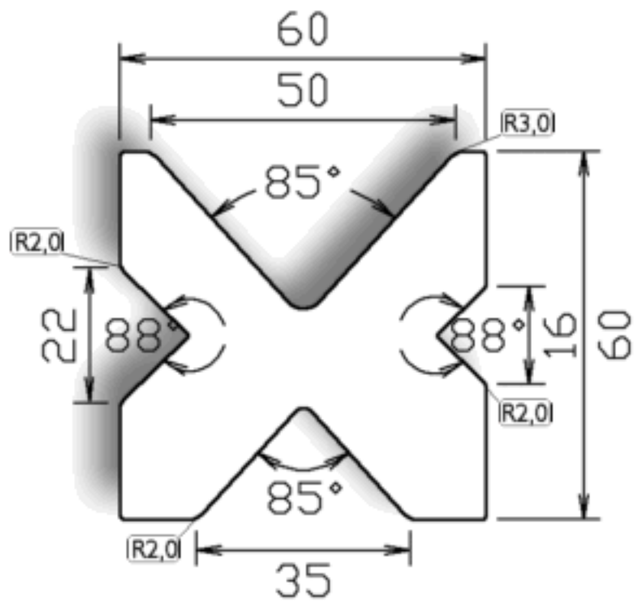

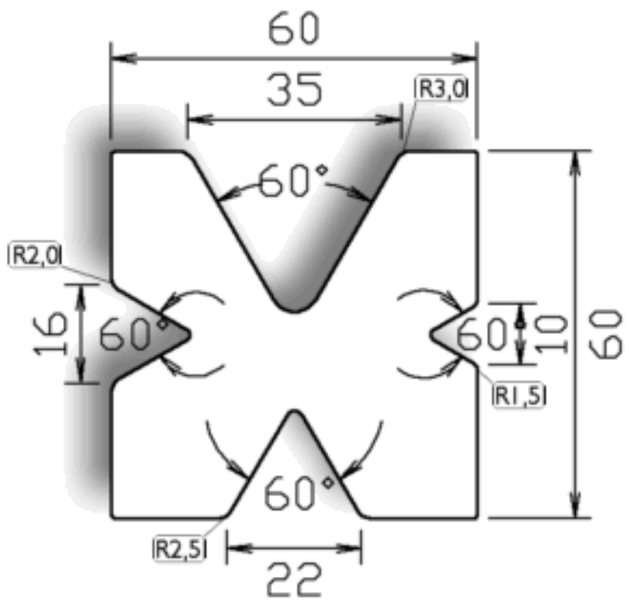

US 208/3U
l.mm.835-415-Fraz.

US 209/4V
l.mm.835-415-Fraz.

US 210/4V
l.mm.835-415-Fraz.

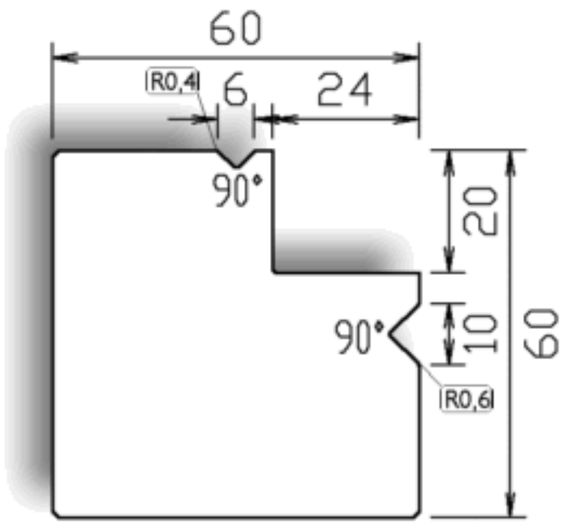

BORST Industrievertretungen
Welf Borst
Luikenweg 28
73733 Esslingen

Tel.: 0711 - 370 36 68
Fax: 0711 - 370 36 68
Mobil: 0151 - 11631111
Email: info@welf-borst.de

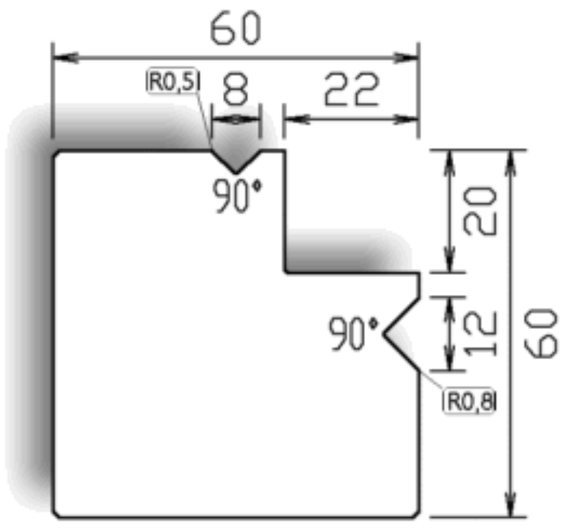

US 216/90°
l.mm.835-415-Fraz.

US 217/90°
l.mm.835-415-Fraz.

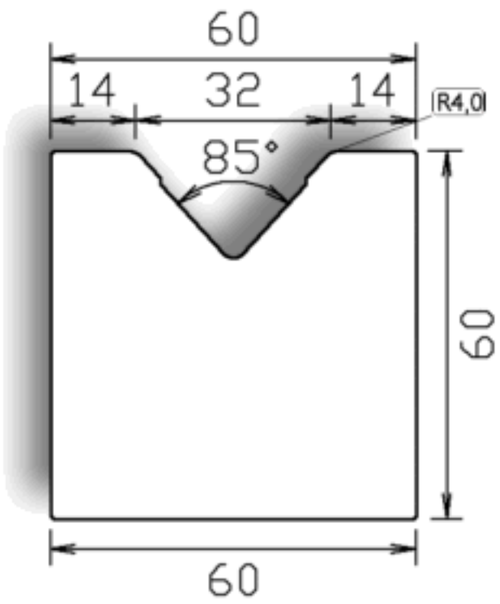

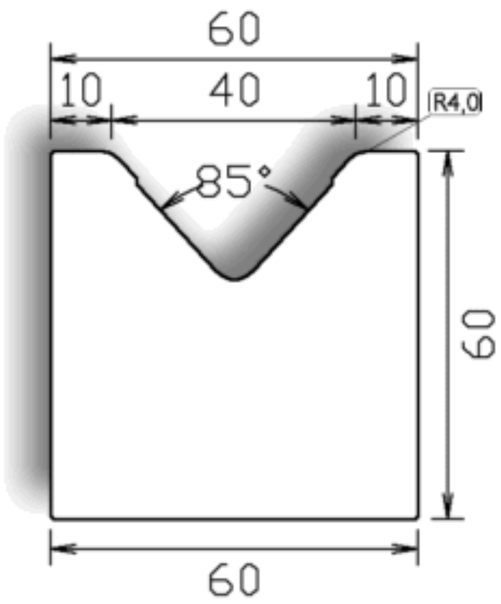

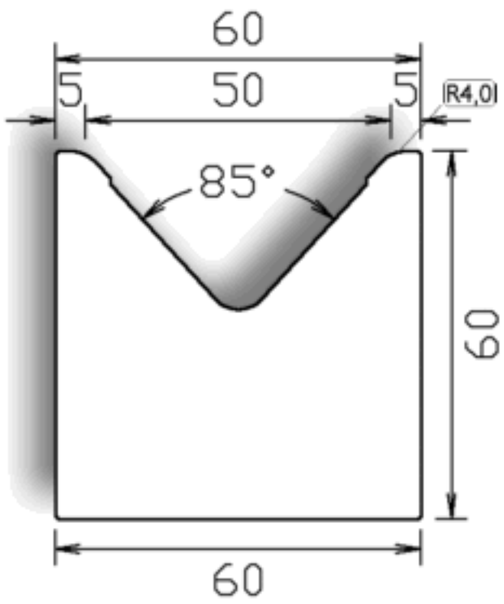

US18

scala 1:2

US 211/32
l.mm.835-415

US 211/40
l.mm.835-415

US 211/50
l.mm.835-415

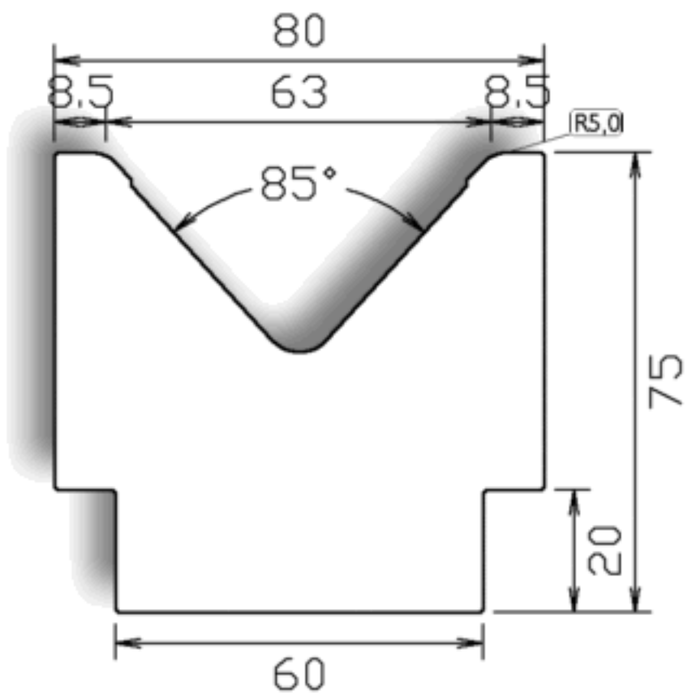

US 211/63
l.mm.835-415

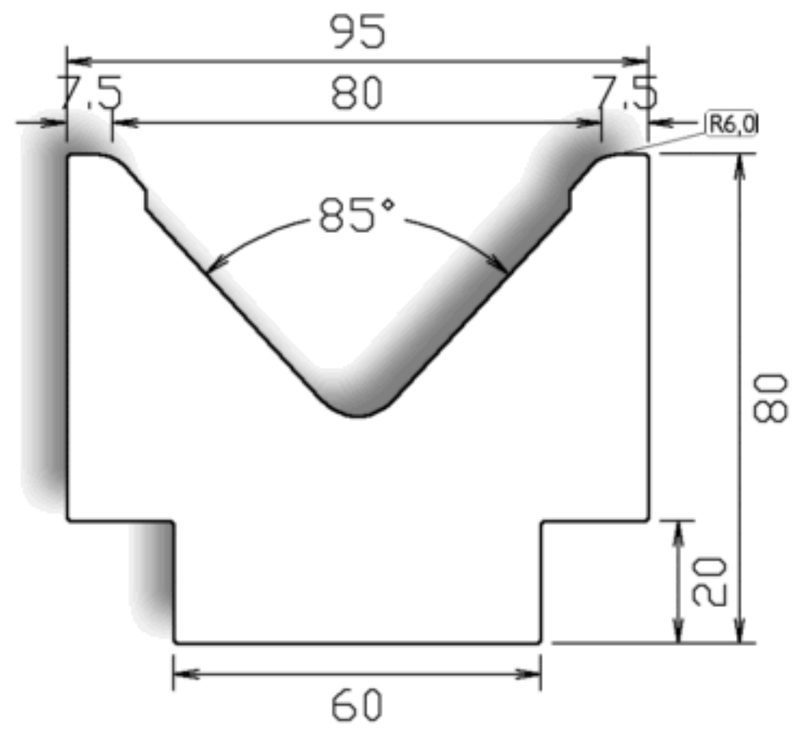

US 211/80
l.mm.835-415

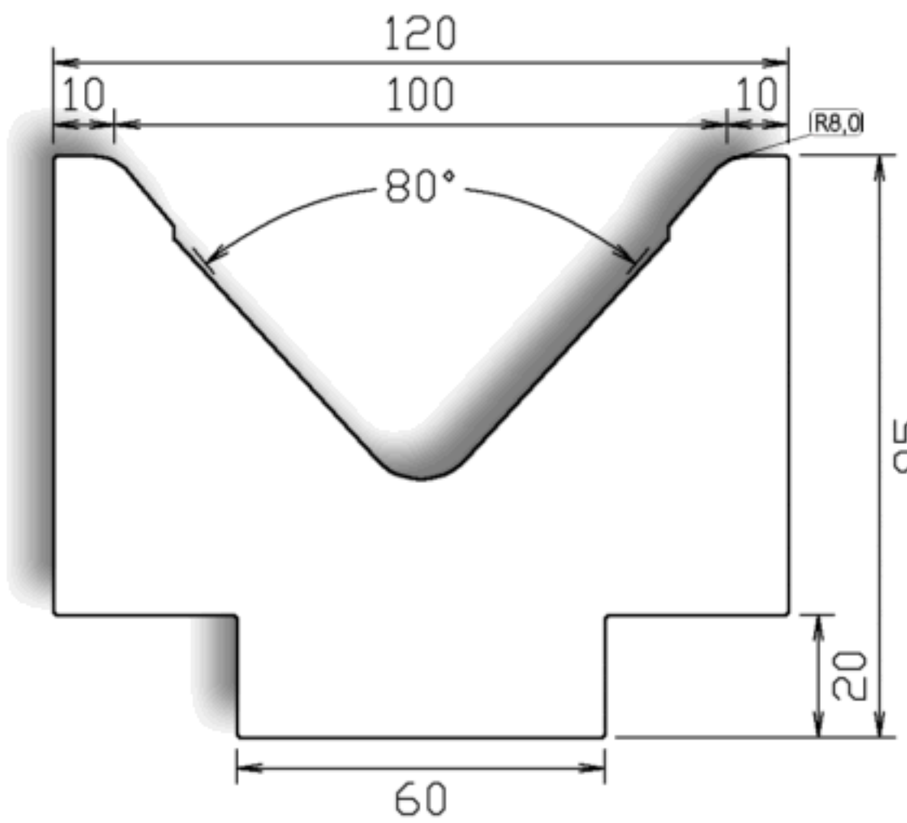

US 211/100
l.mm.835-415

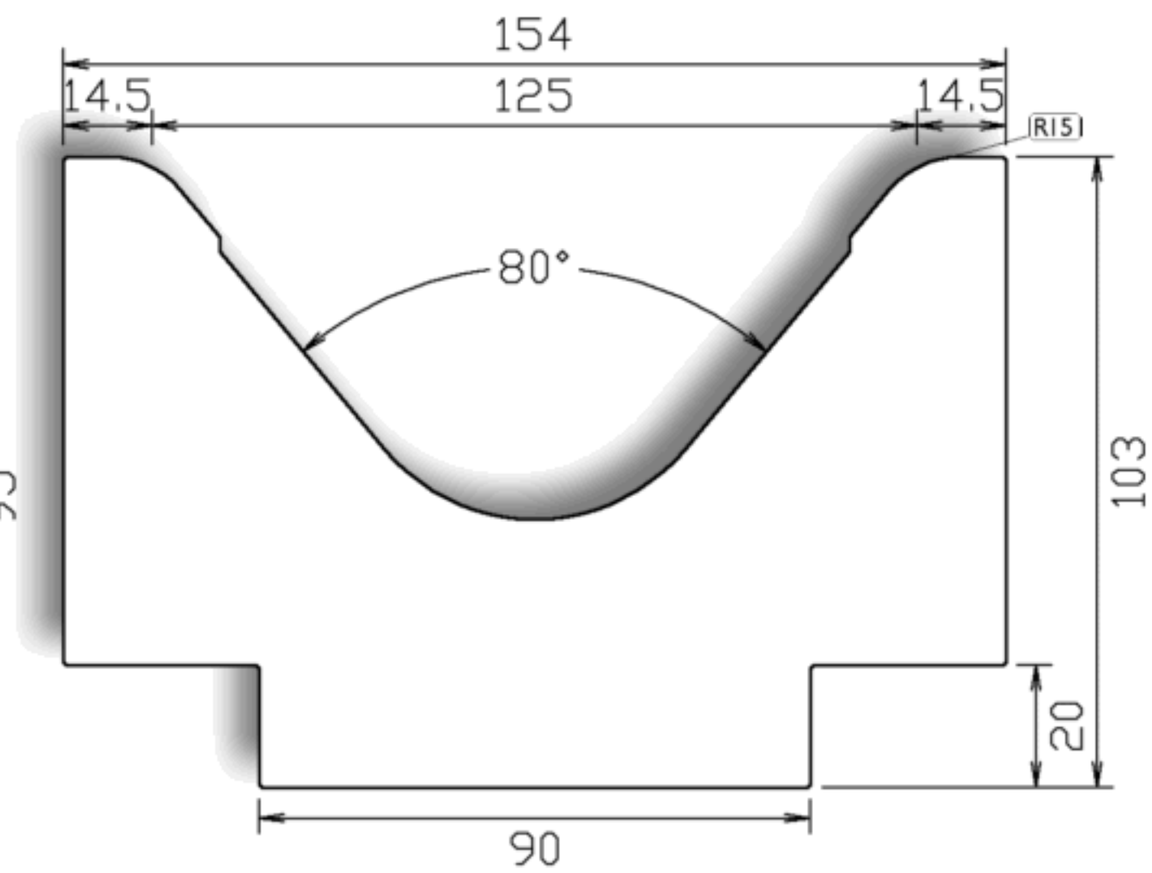

US 211/125
l.mm.835-415

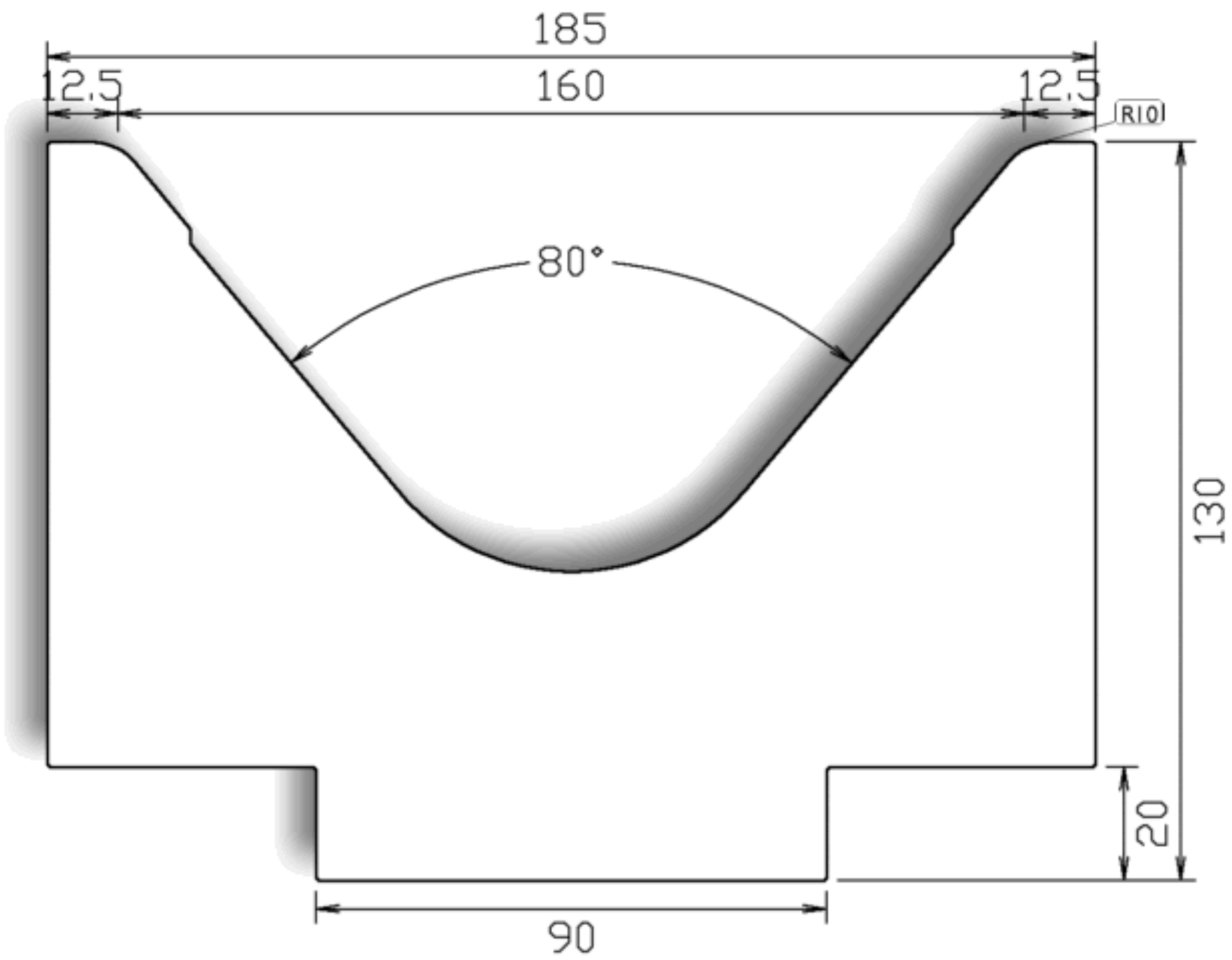

BORST Industrievertretungen
Welf Borst
Luikenweg 28
73733 Esslingen

Tel.: 0711 - 370 36 68
Fax: 0711 - 370 36 68
Mobil: 0151 - 11631111
Email: info@welf-borst.de

US 211/160
l.mm.835-415

US19
scala 1:2

BORST Industrievertretungen
Welf Borst
Luikenweg 28
73733 Esslingen

Tel.: 0711 - 370 36 68
Fax: 0711 - 370 36 68
Mobil: 0151 - 11631111
Email: info@welf-borst.de

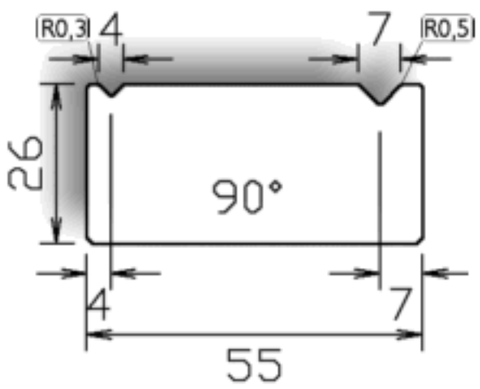

US 206
l.mm.835-415

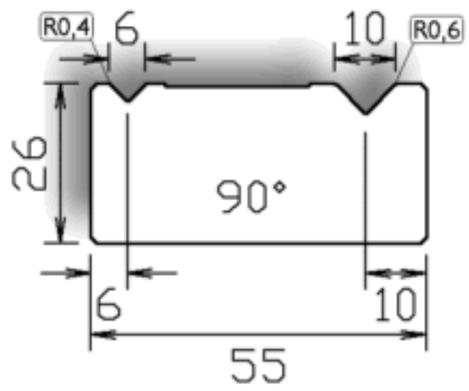

US 212
l.mm.835-415

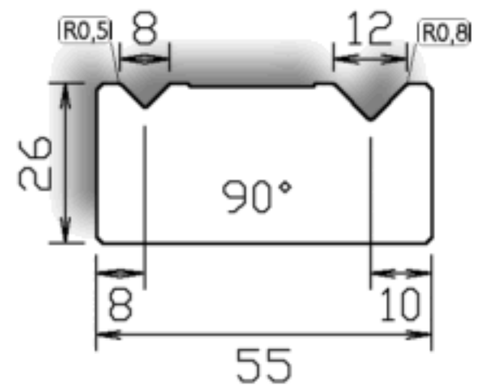

US 213
l.mm.835-415

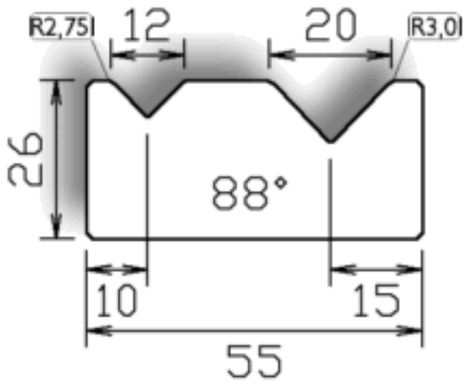

US 214
l.mm.835-415

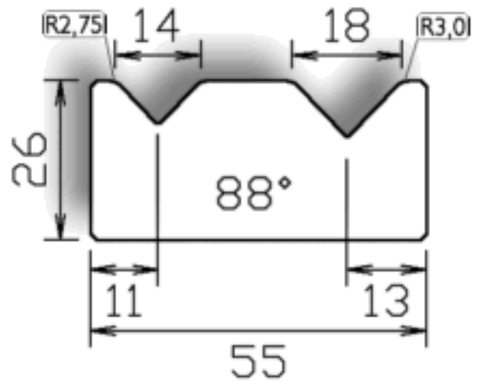

US 207
l.mm.835-415

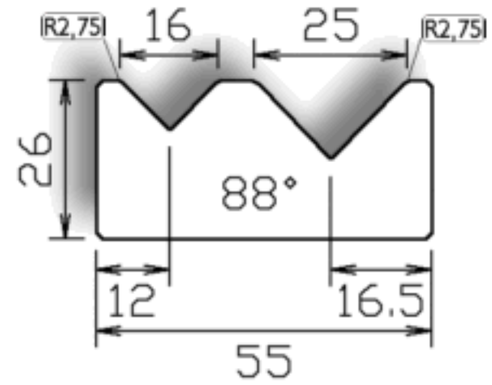

US 215
l.mm.835-415

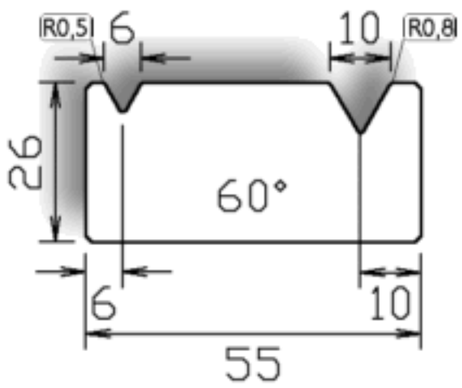

US 218
l.mm.835-415

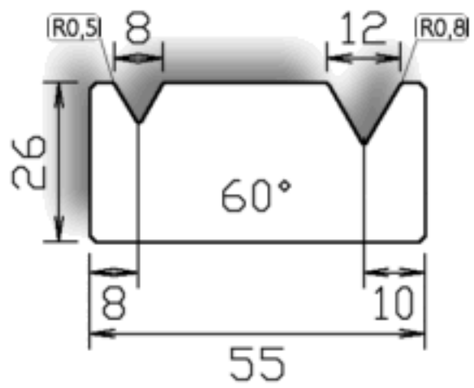

US 219
l.mm.835-415

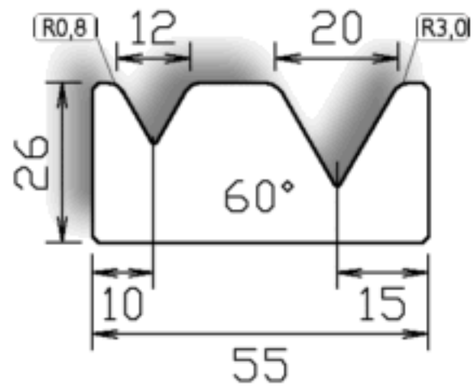

US 221
l.mm.835-415

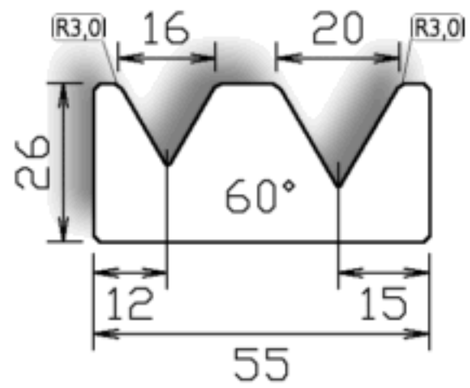

US 222
l.mm.835-415

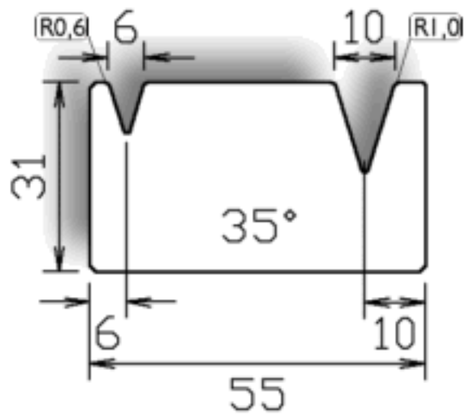

US 223
l.mm.835-415

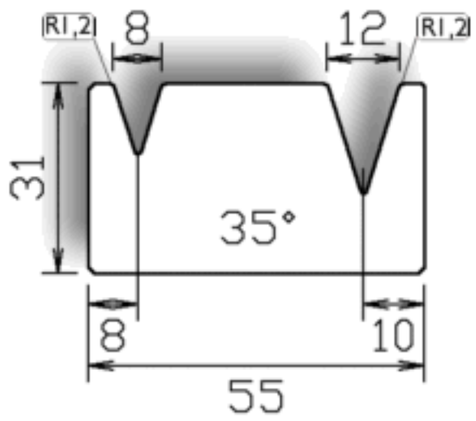

US 224
l.mm.835-415

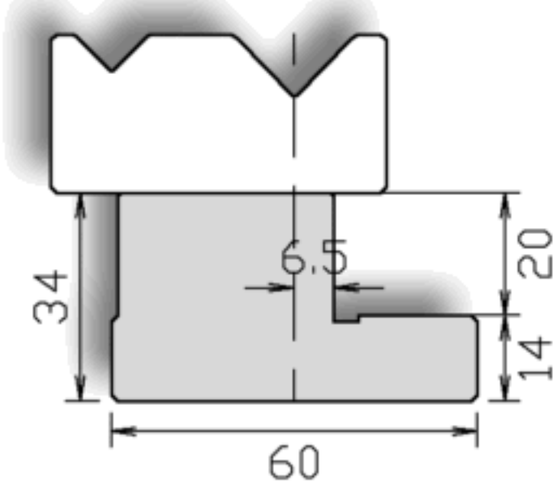

US 406/34
l.mm.835-415

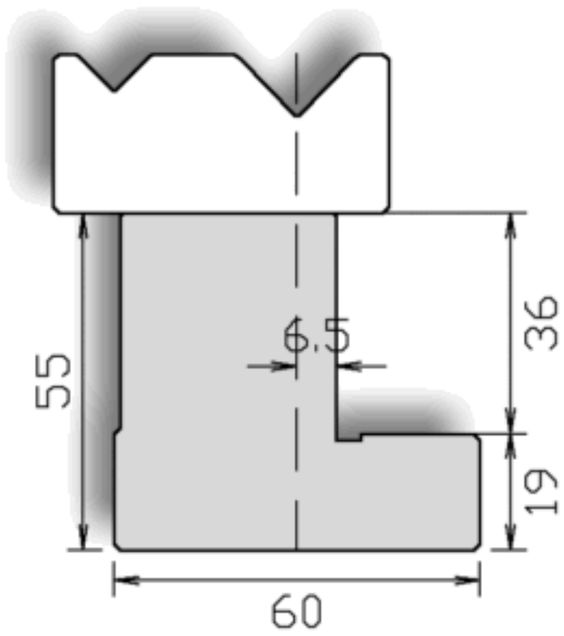

US 407/55
l.mm.835-415

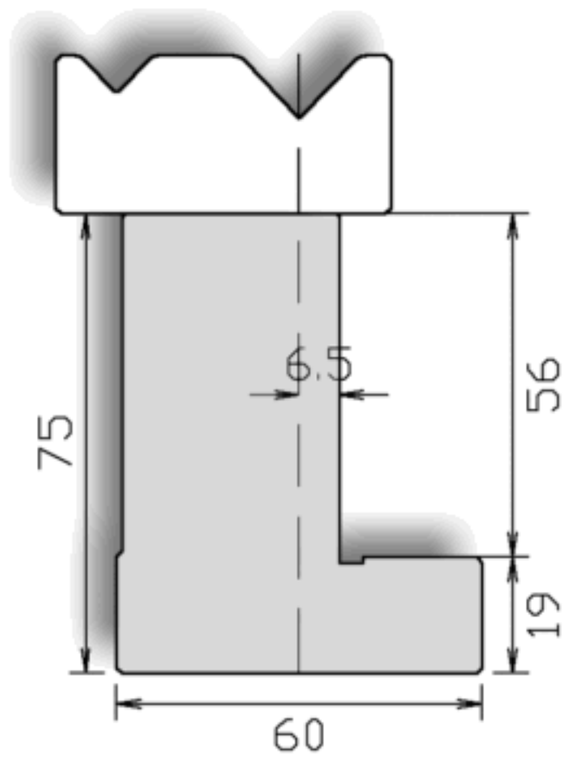

US 408/75
l.mm.835-415

US20

scala 1:2

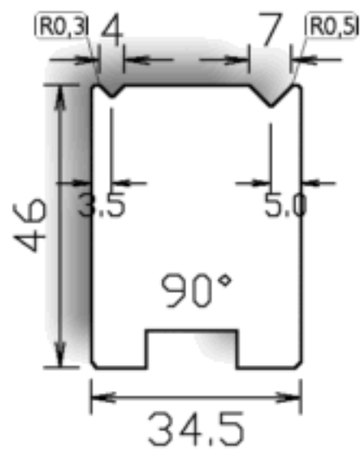

US 510
l.mm.835-415-Fraz.

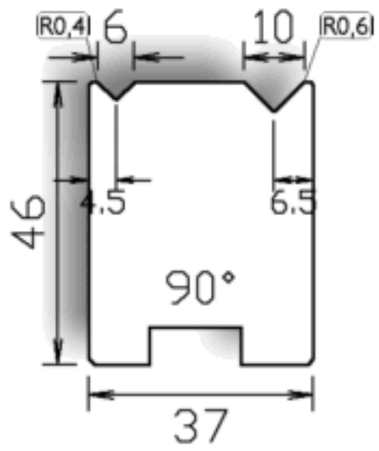

US 520
l.mm.835-415-Fraz.

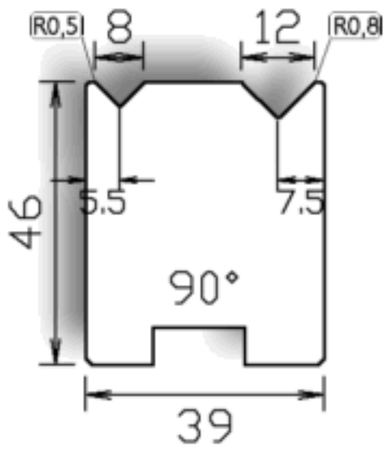

US 530
l.mm.835-415-Fraz.

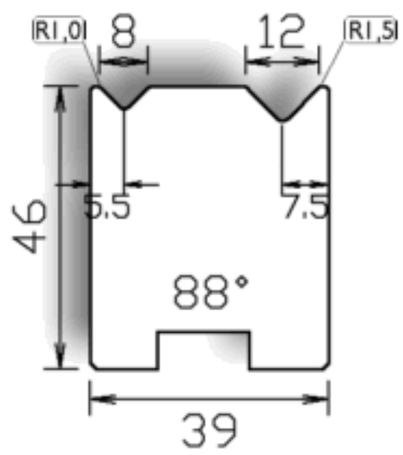

US 540
l.mm.835-415-Fraz.

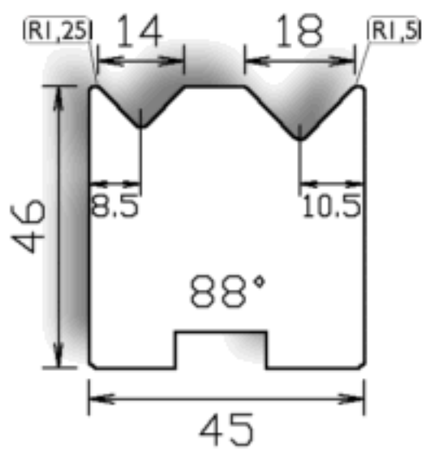

US 550
l.mm.835-415-Fraz.

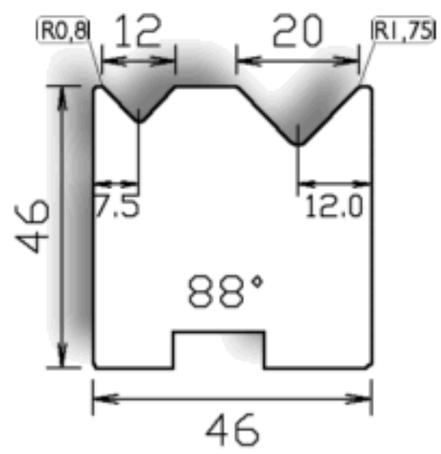

US 560
l.mm.835-415-Fraz.

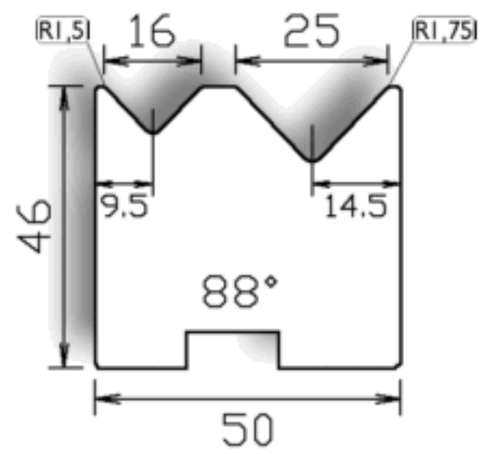

US 570
l.mm.835-415-Fraz.

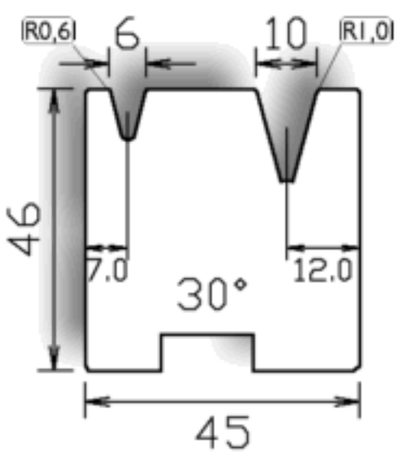

US 580
l.mm.835-415-Fraz.

BORST Industrievertretungen
Welf Borst
Luikenweg 28
73733 Esslingen

Tel.: 0711 - 370 36 68
Fax: 0711 - 370 36 68
Mobil: 0151 - 11631111
Email: info@welf-borst.de

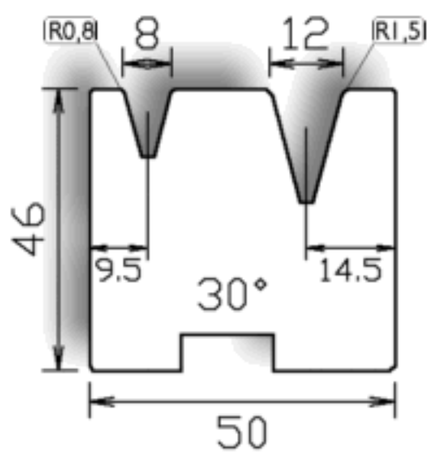

US 590
l.mm.835-415-Fraz.

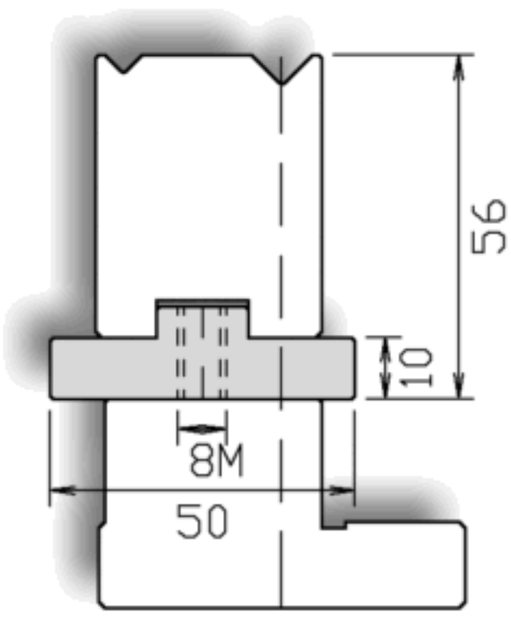

US 500
l.mm.835-415

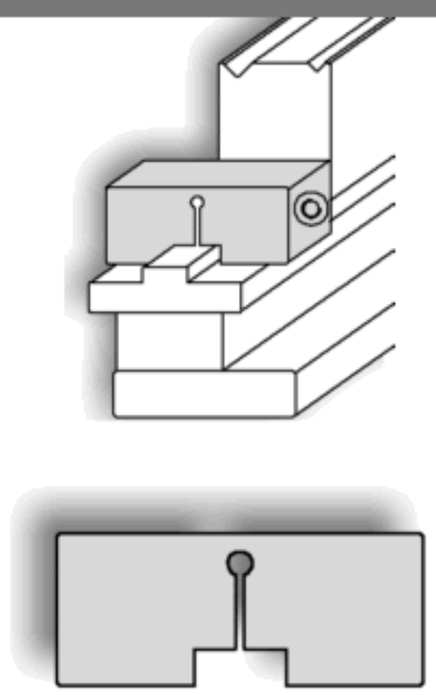

US 501

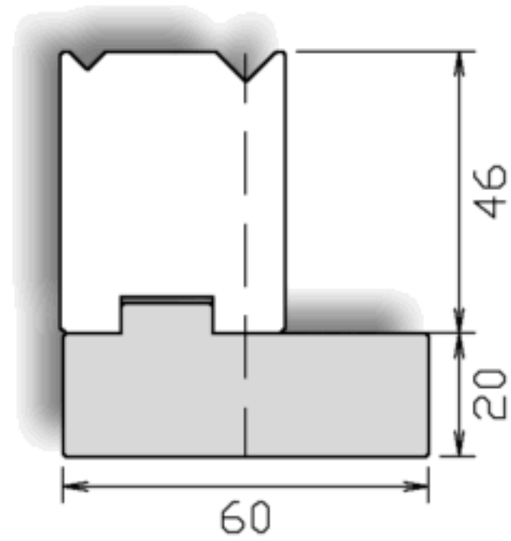

US 505
l.mm.835-415

US21

scala 1:2

BORST Industrievertretungen
Welf Borst
Luikenweg 28
73733 Esslingen

Tel.: 0711 - 370 36 68
Fax: 0711 - 370 36 68
Mobil: 0151 - 11631111
Email: info@welf-borst.de

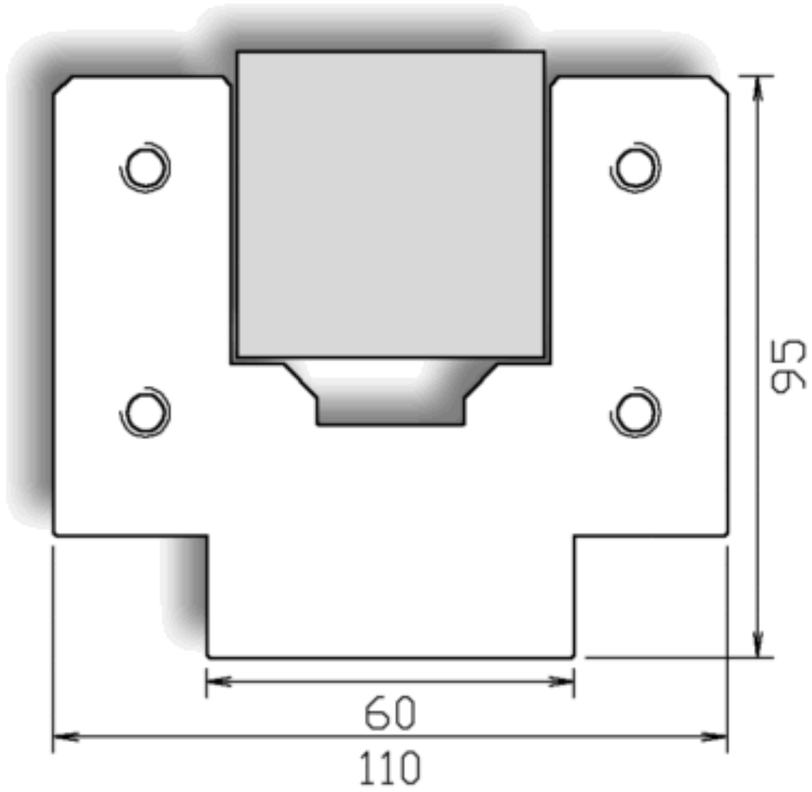

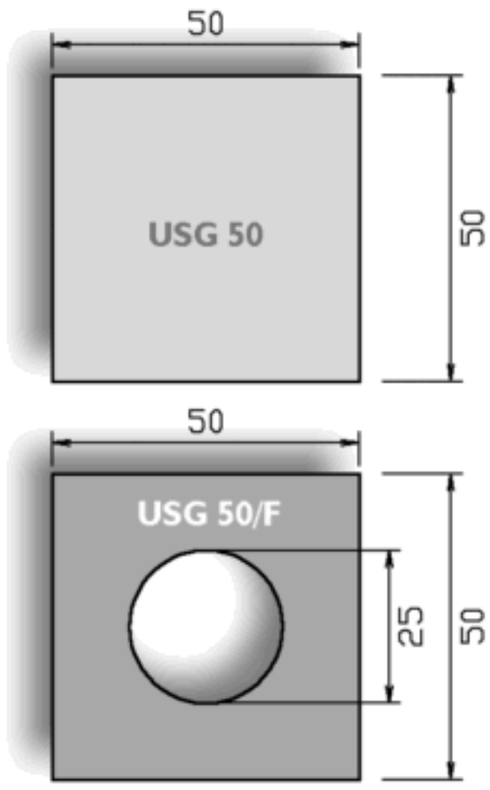

US 250
l.mm.835-415

USG 50 82 Shore
USG 50/F 92 Shore

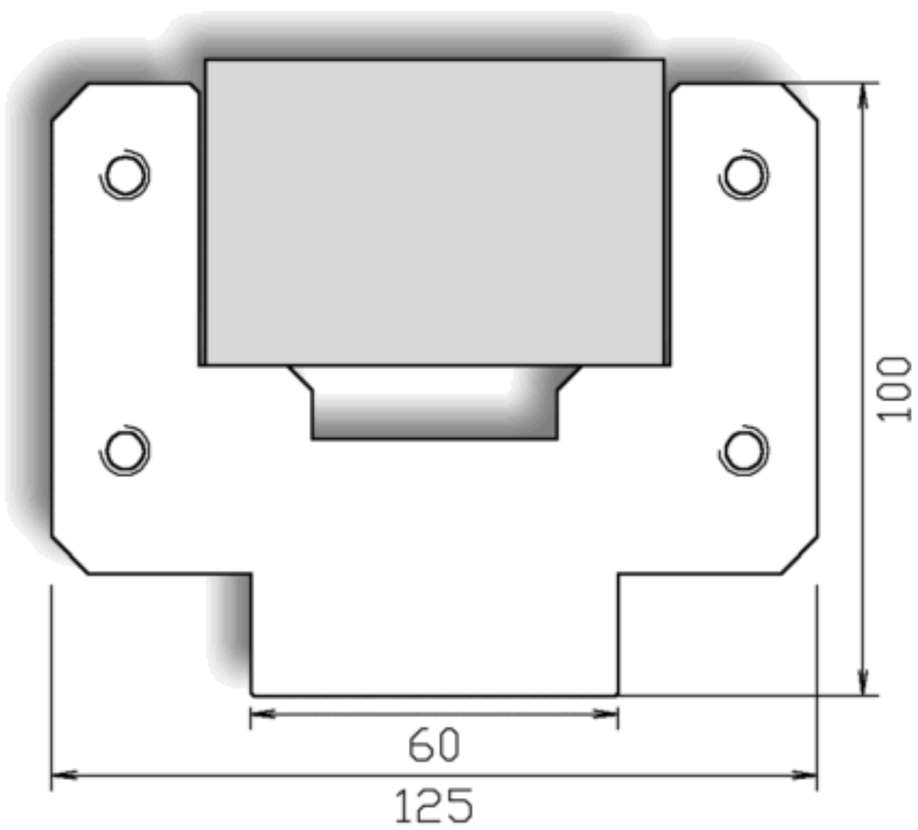

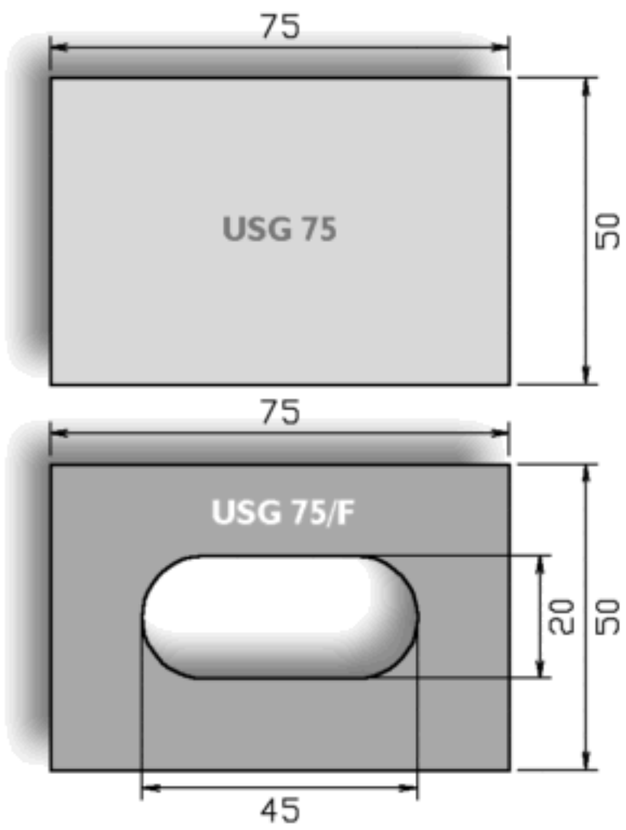

US 275
l.mm.835-415

USG 75 82 Shore
USG 75/F 92 Shore

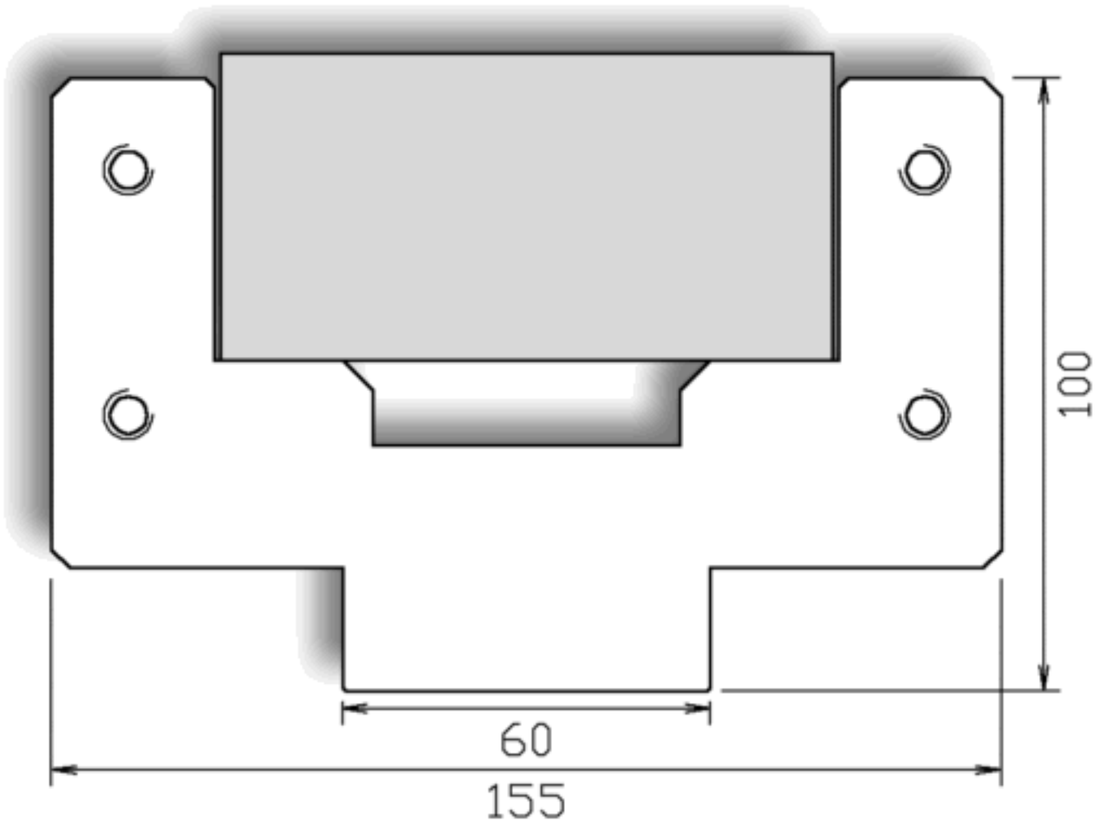

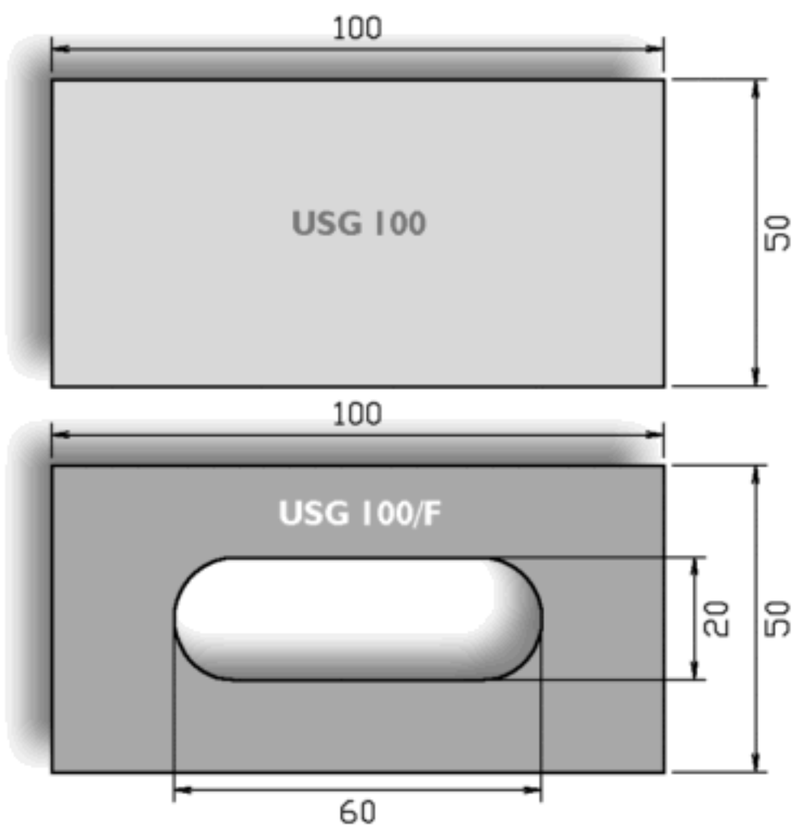

US 2100
l.mm.835-415

USG 100 82 Shore
USG 100/F 92 Shore

US22

scala 1:2

BORST Industrievertretungen
Welf Borst
Luikenweg 28
73733 Esslingen

Tel.: 0711 - 370 36 68
Fax: 0711 - 370 36 68
Mobil: 0151 - 11631111
Email: info@welf-borst.de

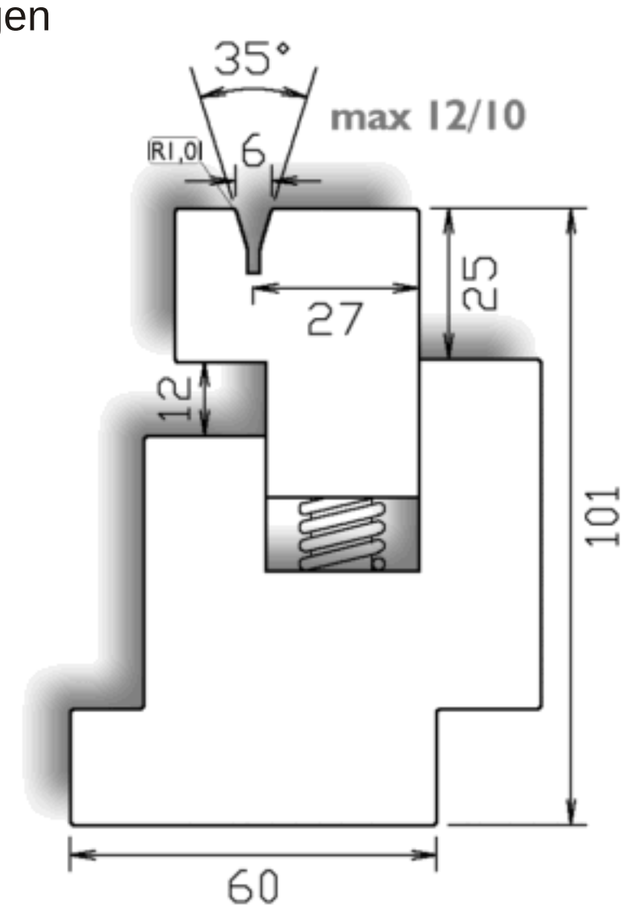

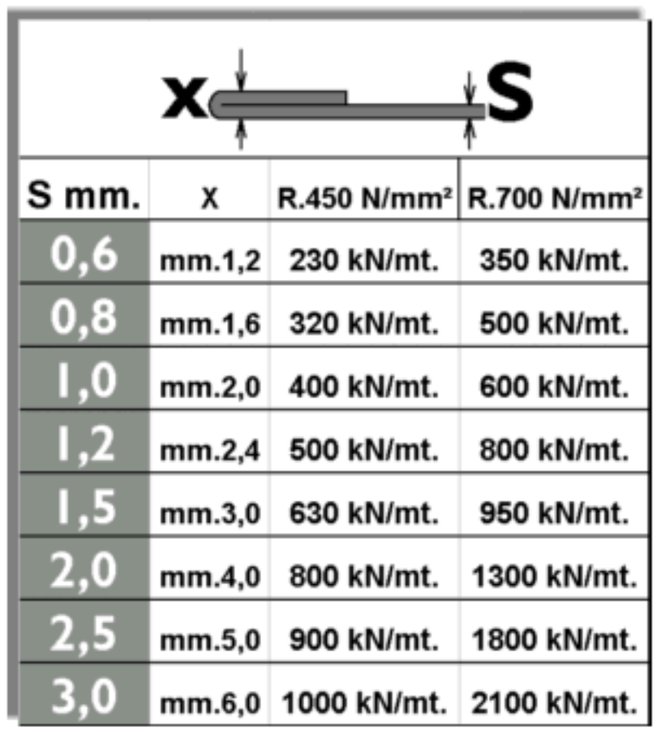

S mm.	X	R.450 N/mm²	R.700 N/mm²
0,6	mm.1,2	230 kN/mt.	350 kN/mt.
0,8	mm.1,6	320 kN/mt.	500 kN/mt.
1,0	mm.2,0	400 kN/mt.	600 kN/mt.
1,2	mm.2,4	500 kN/mt.	800 kN/mt.
1,5	mm.3,0	630 kN/mt.	950 kN/mt.
2,0	mm.4,0	800 kN/mt.	1300 kN/mt.
2,5	mm.5,0	900 kN/mt.	1800 kN/mt.
3,0	mm.6,0	1000 kN/mt.	2100 kN/mt.

US 301 V6/35°
l.mm.835-415

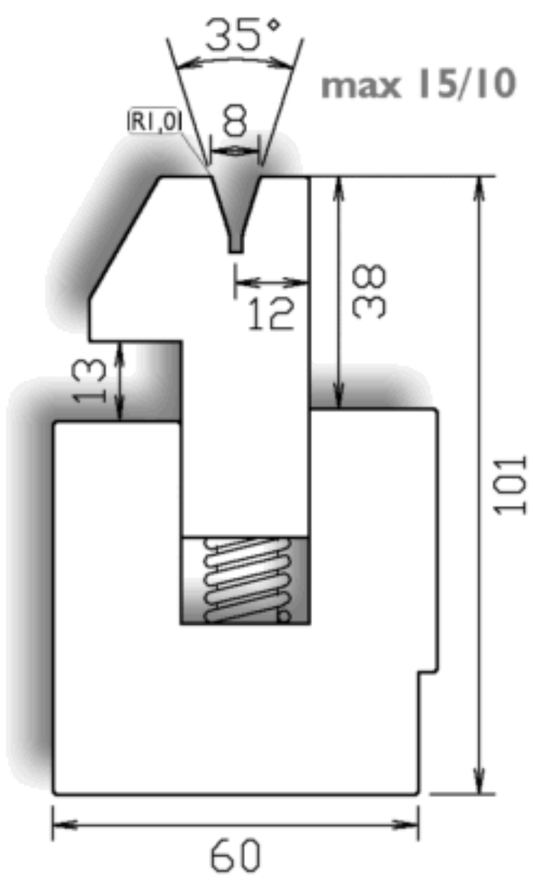

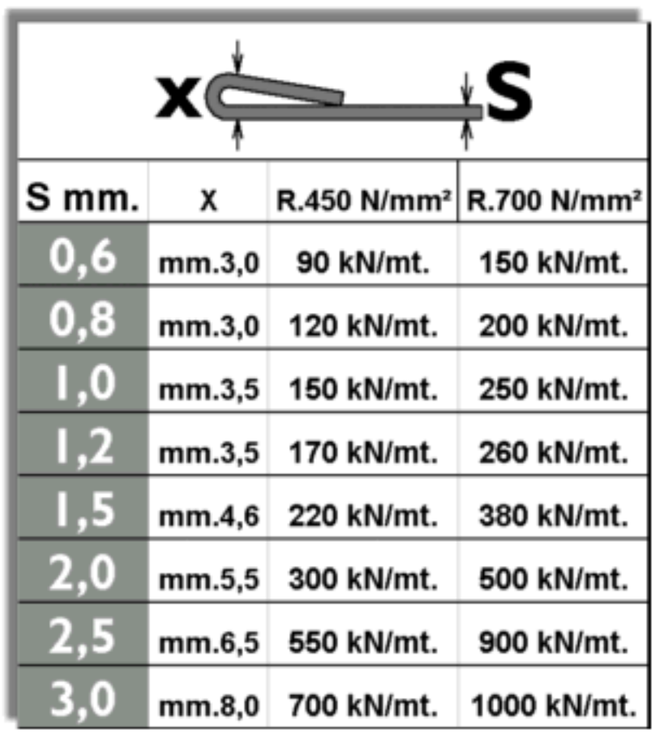

S mm.	X	R.450 N/mm²	R.700 N/mm²
0,6	mm.3,0	90 kN/mt.	150 kN/mt.
0,8	mm.3,0	120 kN/mt.	200 kN/mt.
1,0	mm.3,5	150 kN/mt.	250 kN/mt.
1,2	mm.3,5	170 kN/mt.	260 kN/mt.
1,5	mm.4,6	220 kN/mt.	380 kN/mt.
2,0	mm.5,5	300 kN/mt.	500 kN/mt.
2,5	mm.6,5	550 kN/mt.	900 kN/mt.
3,0	mm.8,0	700 kN/mt.	1000 kN/mt.

US 303 V8/35°
l.mm.835-415

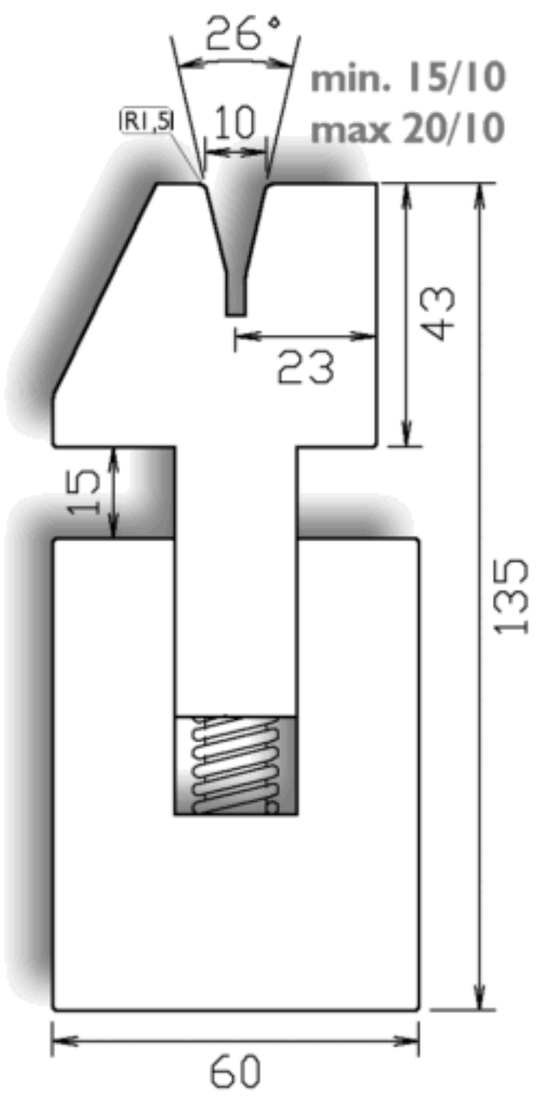

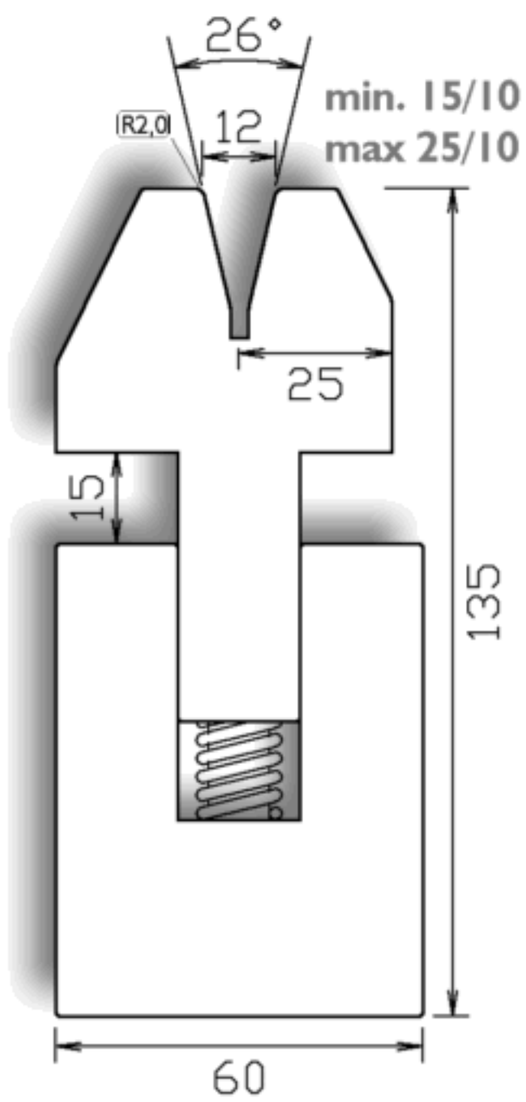

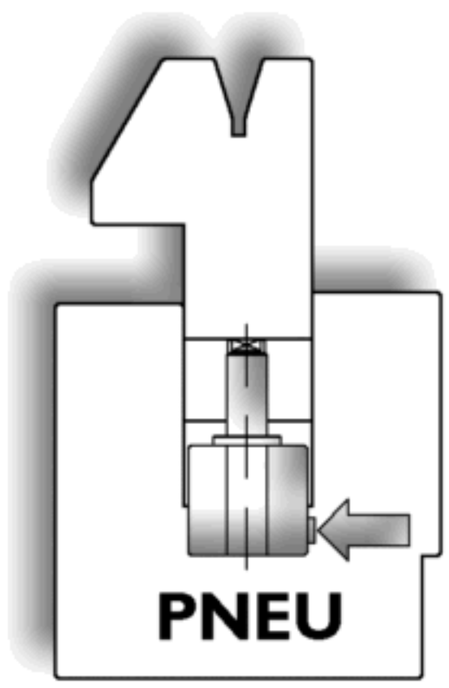

Su richiesta questi utensili possono essere forniti con cilindri pneumatici per il sollevamento dell'elemento superiore.

Upon request these tools can be supplied with pneumatic cylinders for lifting of upper element.

Auf Anfrage können diese Werkzeuge mit Druckluft-Zylindern zum Anheben des oberen Werkzeugs versehen werden.

Sur demande ces outils peuvent être fournis avec cylindres pneumatiques pour le levage de l'élémente supérieur.

US 302 V10/26°
l.mm.835-415

US 300 V12/26°
l.mm.835-415

scala 1:2

BORST Industrievertretungen
Welf Borst
Luikenweg 28
73733 Esslingen

Tel.: 0711 - 370 36 68
Fax: 0711 - 370 36 68
Mobil: 0151 - 11631111
Email: info@welf-borst.de

6

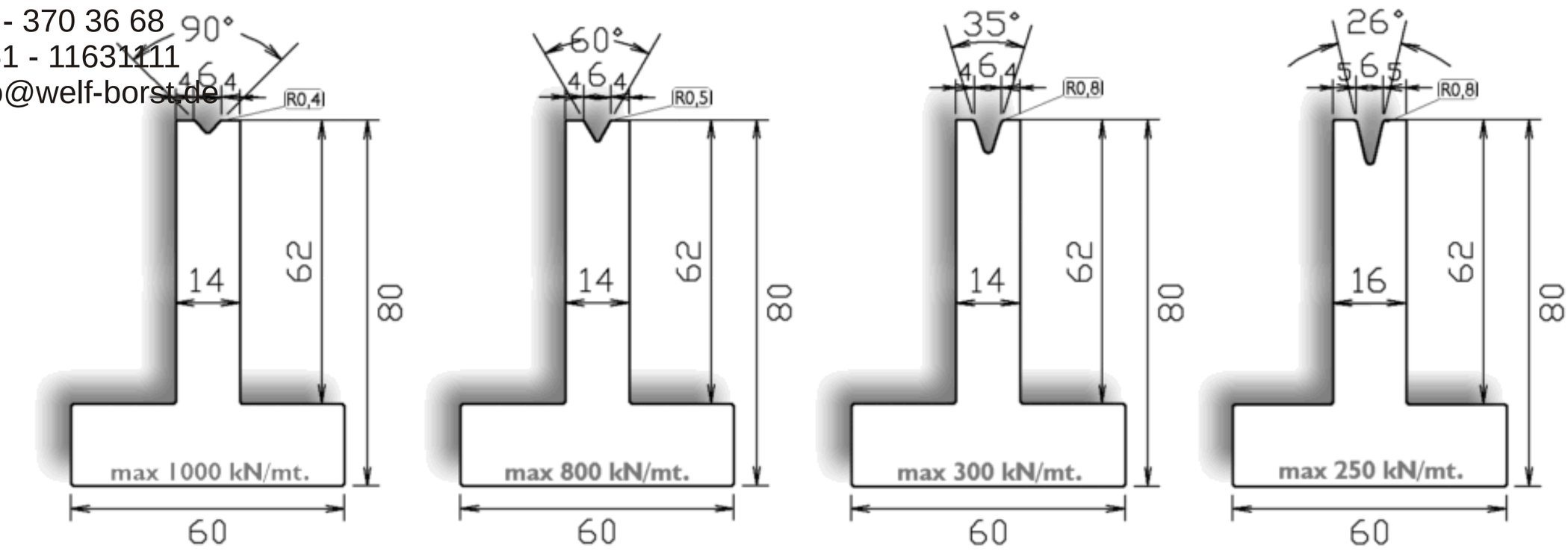

US 220/90° V6	US 220/60° V6	US 220/35° V6	US 220/26° V6
l.mm.835-415-Fraz.	l.mm.835-415-Fraz.	l.mm.835-415-Fraz.	l.mm.835-415-Fraz.

8

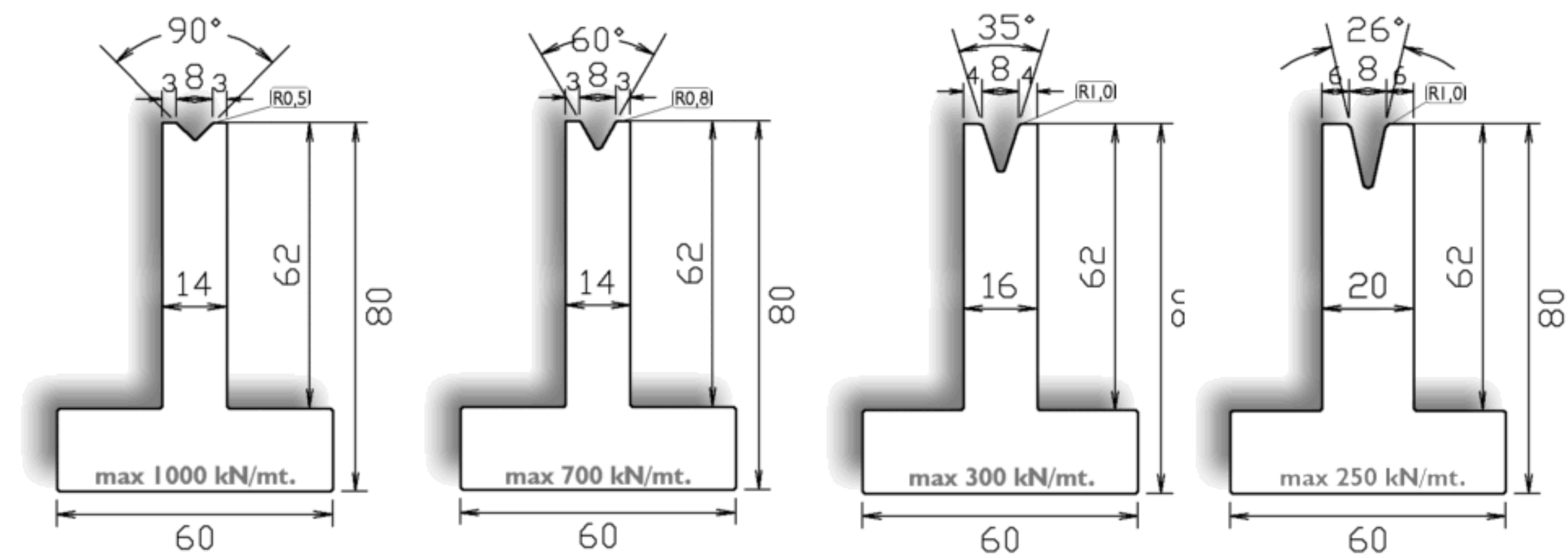

US 220/90° V8	US 220/60° V8	US 220/35° V8	US 220/26°V 8
l.mm.835-415-Fraz.	l.mm.835-415-Fraz.	l.mm.835-415-Fraz.	l.mm.835-415-Fraz.

10

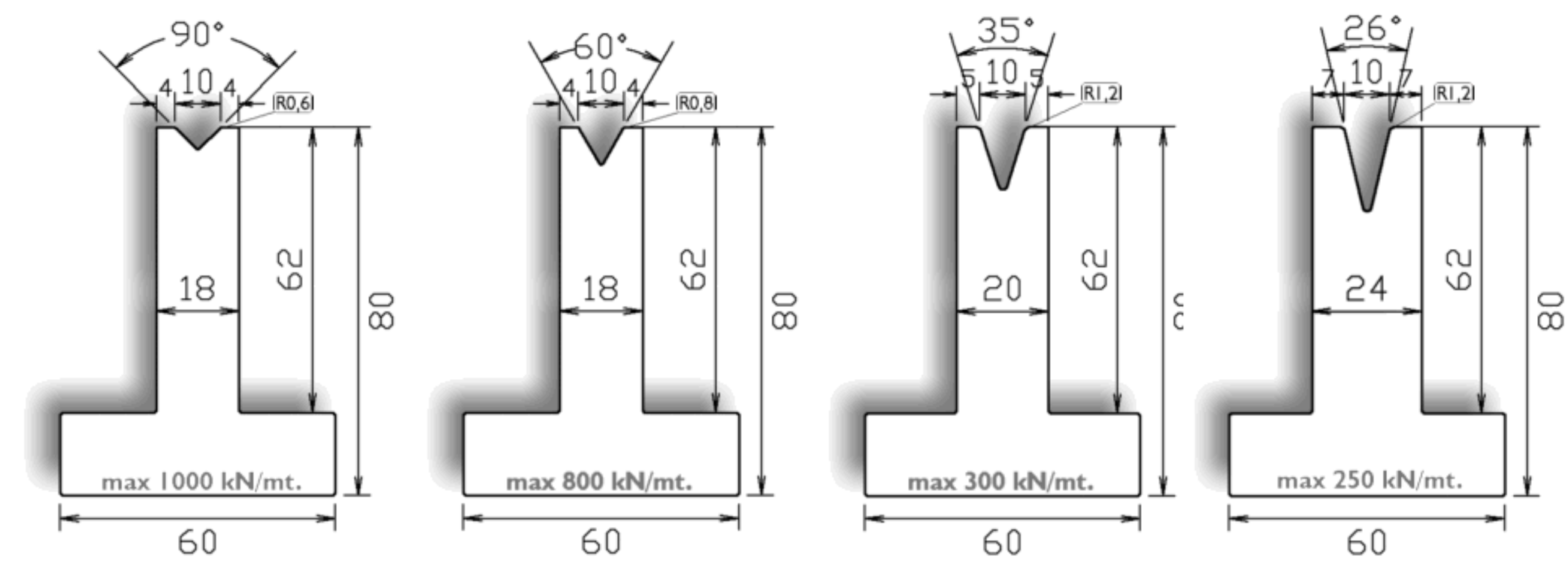

US 220/90° V10	US 220/60° V10	US 220/35° V10	US 220/26°V10
l.mm.835-415-Fraz.	l.mm.835-415-Fraz.	l.mm.835-415-Fraz.	l.mm.835-415-Fraz.

US24

scala 1:2

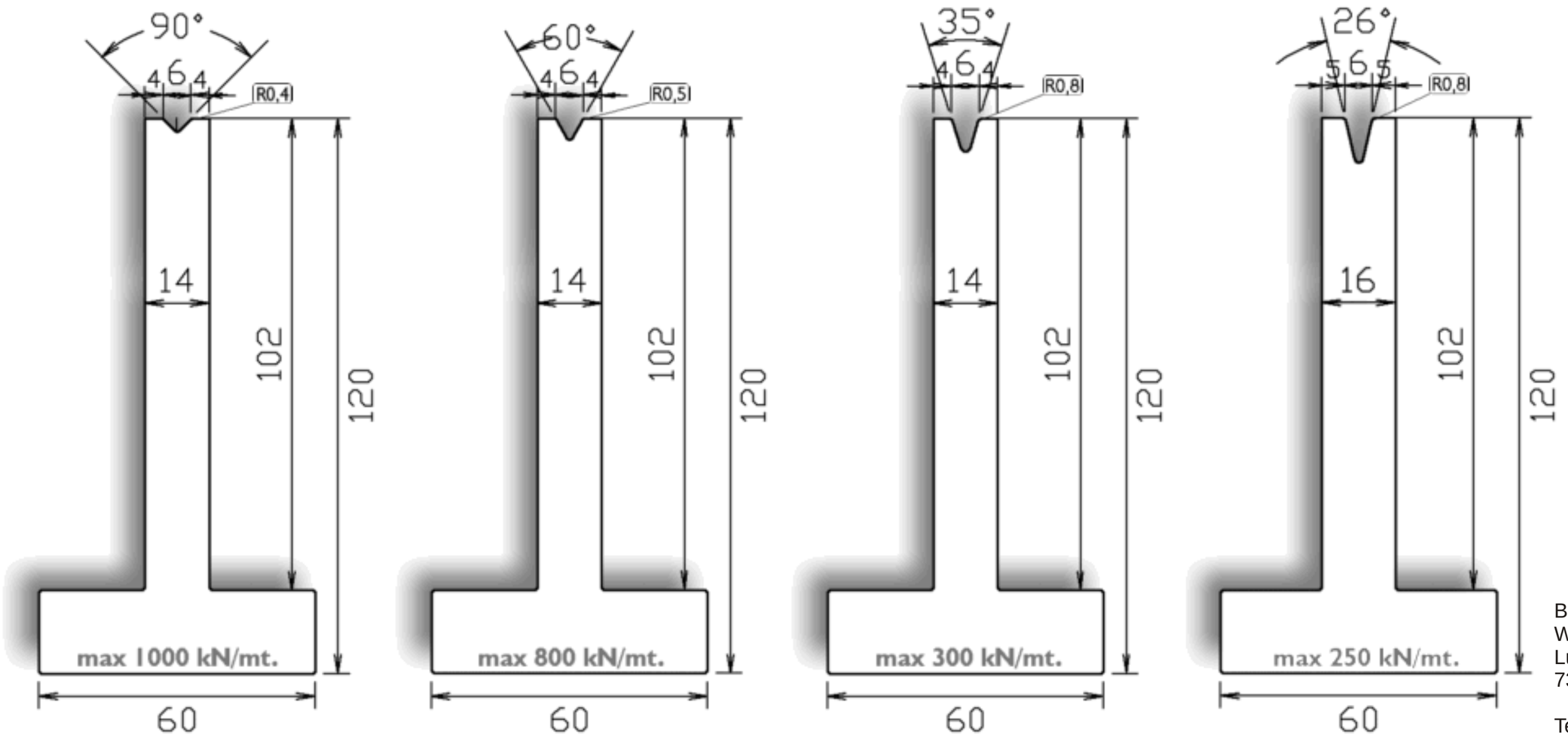

US 420/90° V6 l.mm.835-415-Fraz.
US 420/60° V6 l.mm.835-415-Fraz.
US 420/35° V6 l.mm.835-415-Fraz.
US 420/26° V6 l.mm.835-415-Fraz.

6

BORST Industrievertretungen
Welf Borst
Luikenweg 28
73733 Esslingen

Tel.: 0711 - 370 36 68
Fax: 0711 - 370 36 68
Mobil: 0151 - 11631111
Email: info@welf-borst.de

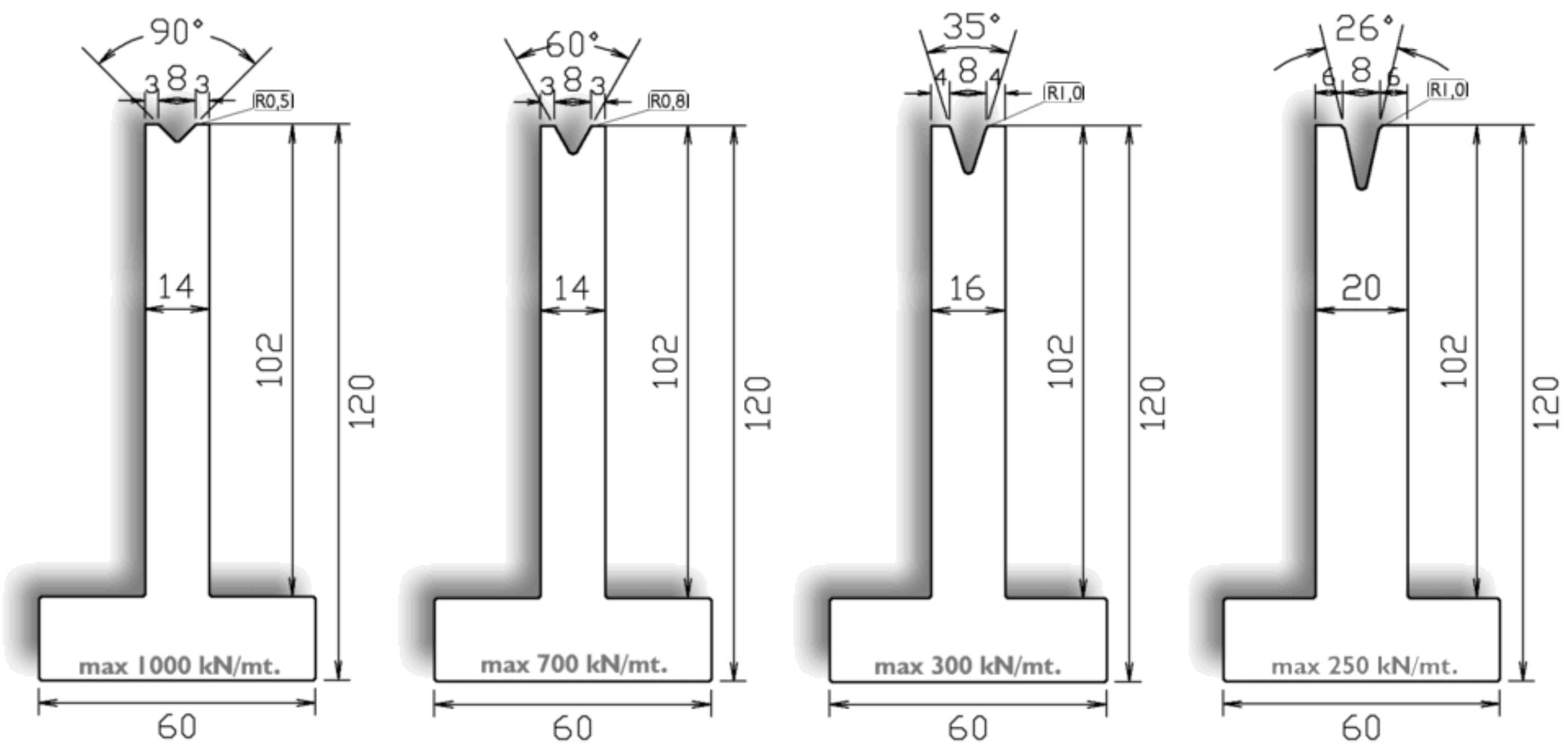

US 420/90° V8 l.mm.835-415-Fraz.
US 420/60° V8 l.mm.835-415-Fraz.
US 420/35° V8 l.mm.835-415-Fraz.
US 420/26° V8 l.mm.835-415-Fraz.

8

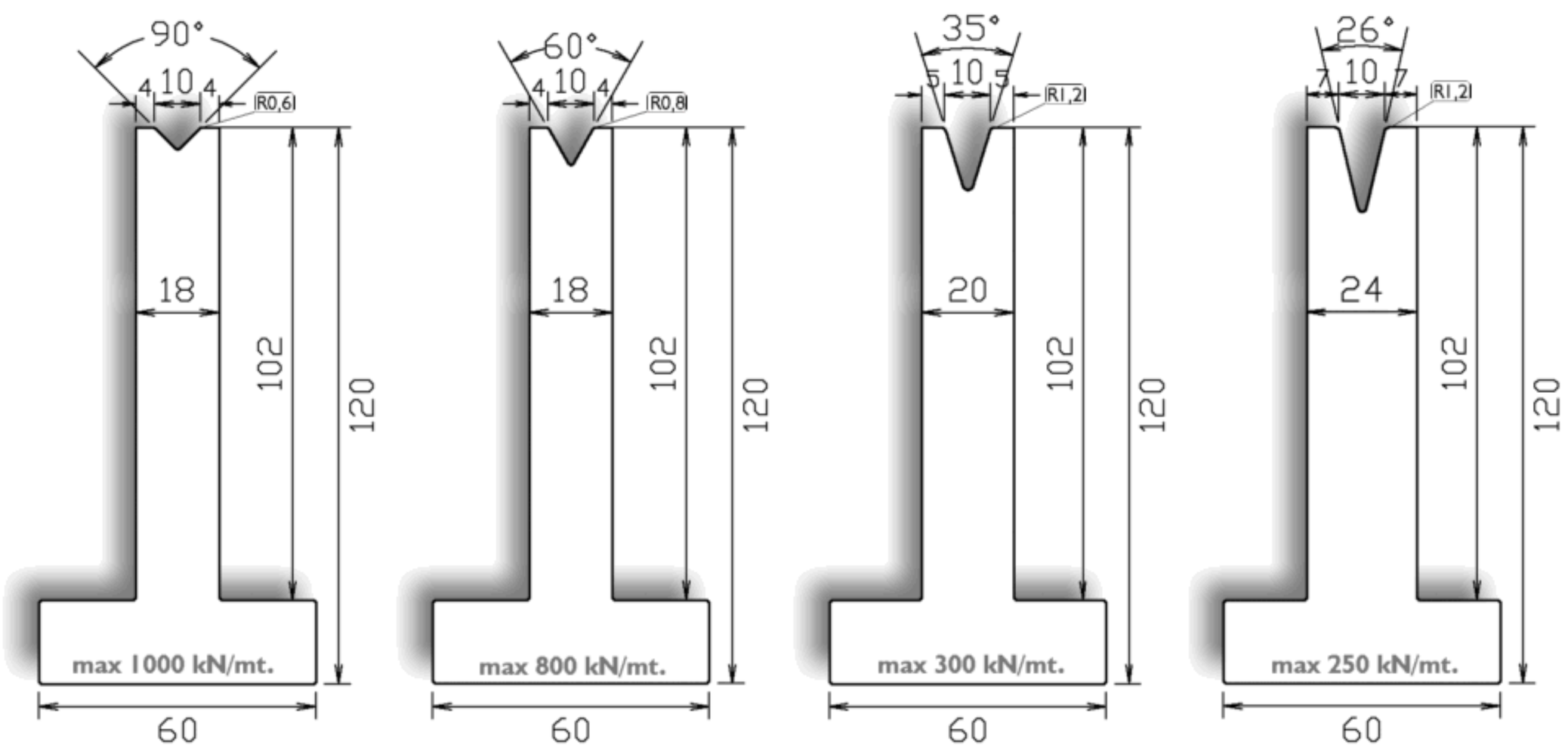

US 420/90° V10 l.mm.835-415-Fraz.
US 420/60° V10 l.mm.835-415-Fraz.
US 420/35° V10 l.mm.835-415-Fraz.
US 420/26° V10 l.mm.835-415-Fraz.

10

US25

scala 1:2

12

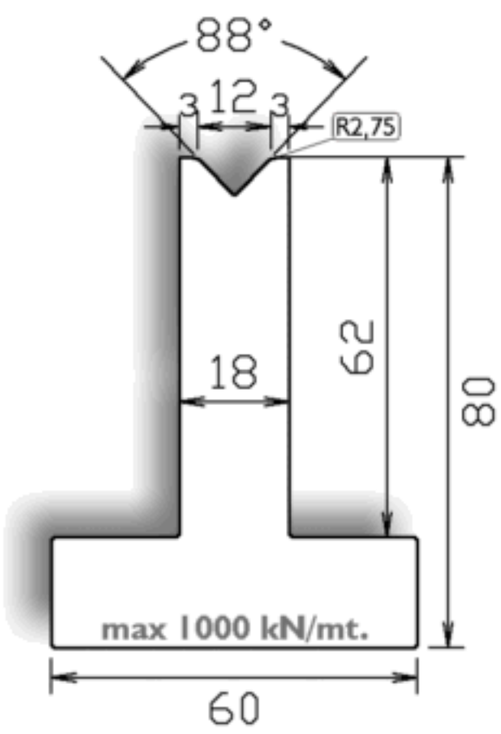

US 220/88° V12
l.mm.835-415-Fraz.

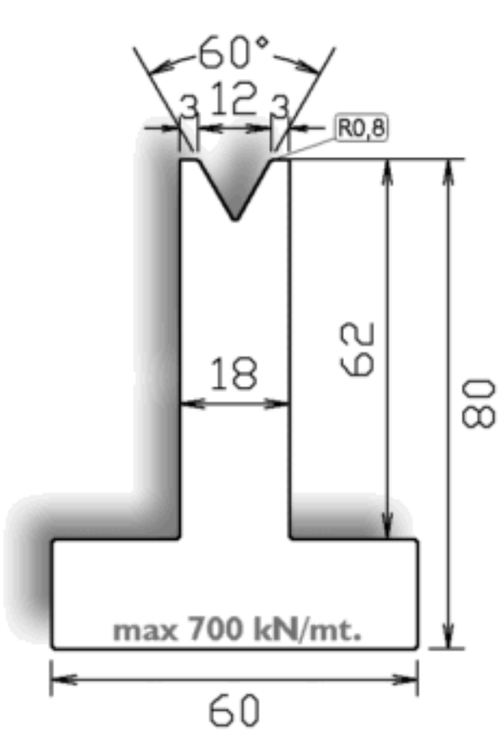

US 220/60° V12
l.mm.835-415-Fraz.

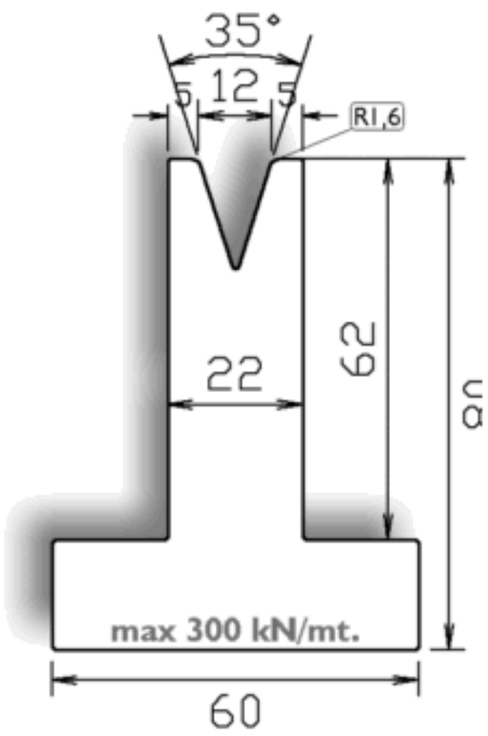

US 220/35° V12
l.mm.835-415-Fraz.

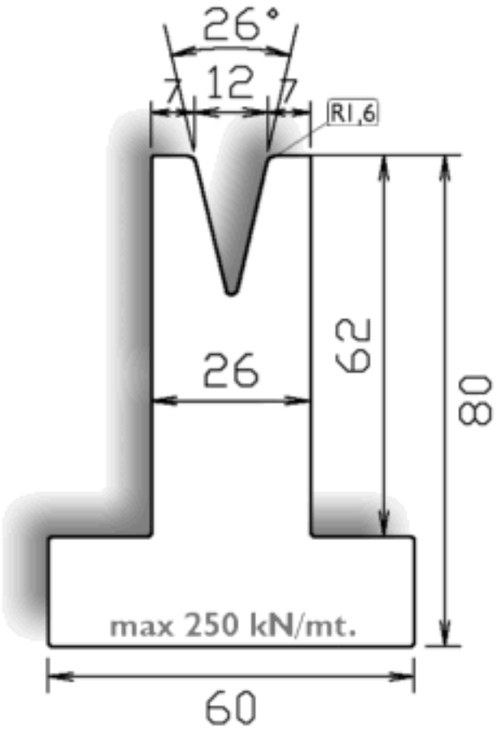

US 220/26° V12
l.mm.835-415-Fraz.

BORST Industrievertretungen
Welf Borst
Luikenweg 28
73733 Esslingen

Tel.: 0711 - 370 36 68
Fax: 0711 - 370 36 68
Mobil: 0151 - 11631111
Email: info@welf-borst.de

16

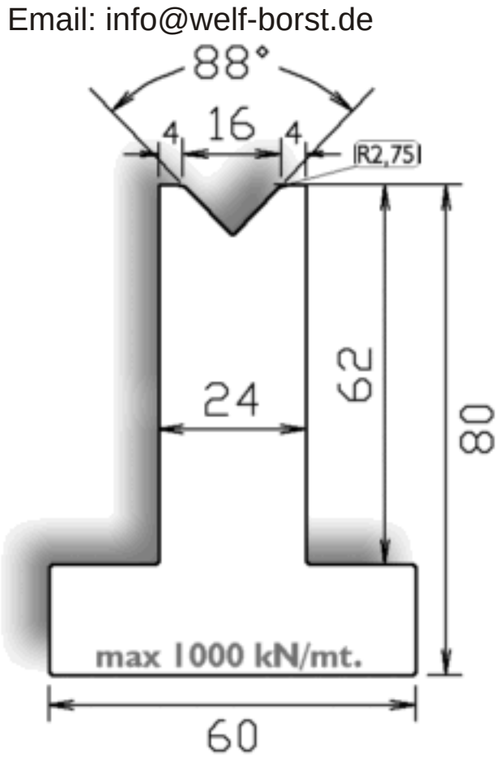

US 220/88° V16
l.mm.835-415-Fraz.

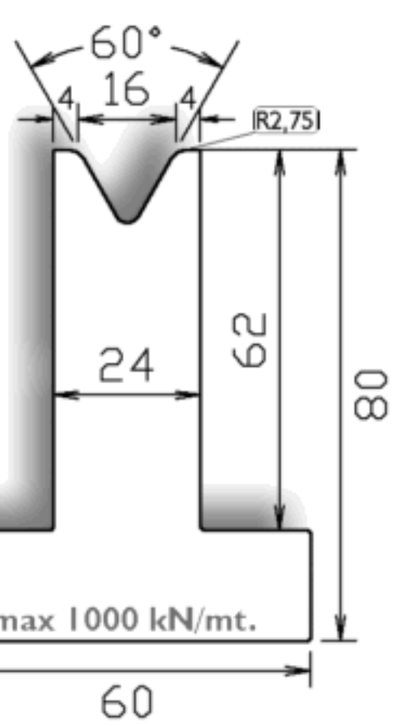

US 220/60° V16
l.mm.835-415-Fraz.

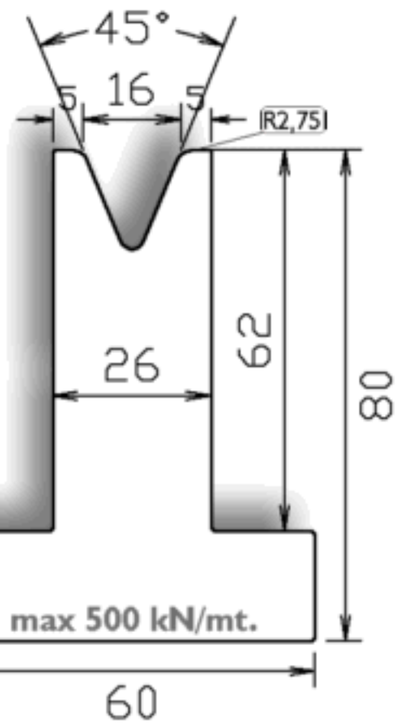

US 220/45° V16
l.mm.835-415-Fraz.

20

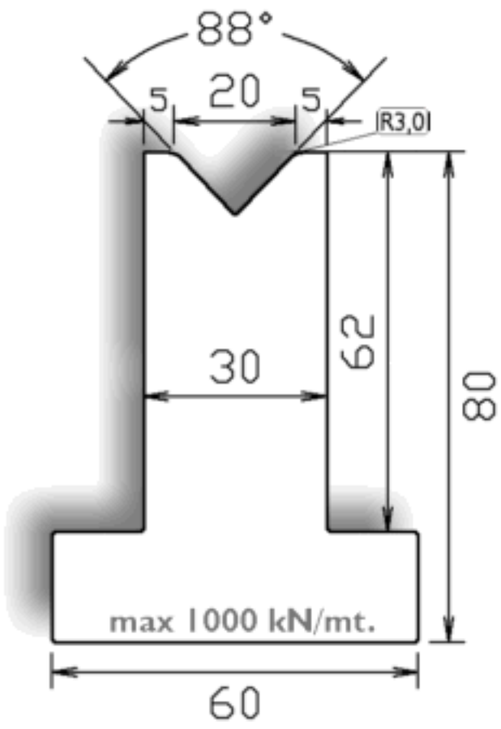

US 220/88° V20
l.mm.835-415-Fraz.

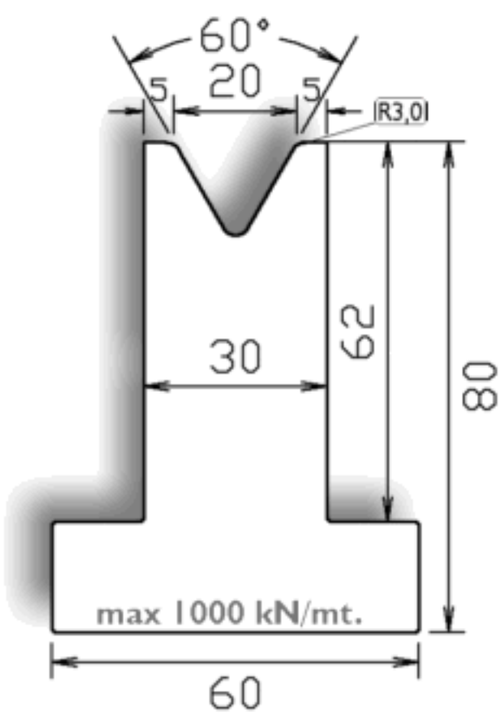

US 220/60° V20
l.mm.835-415-Fraz.

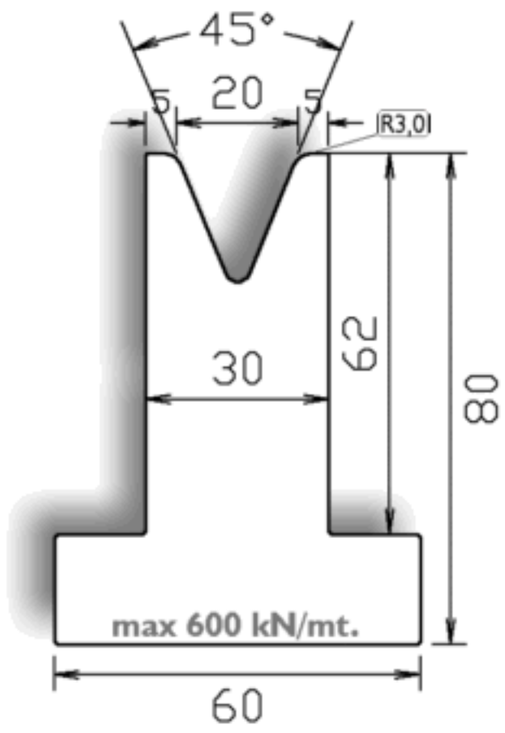

US 220/45° V20
l.mm.835-415-Fraz.

US26

scala 1:2

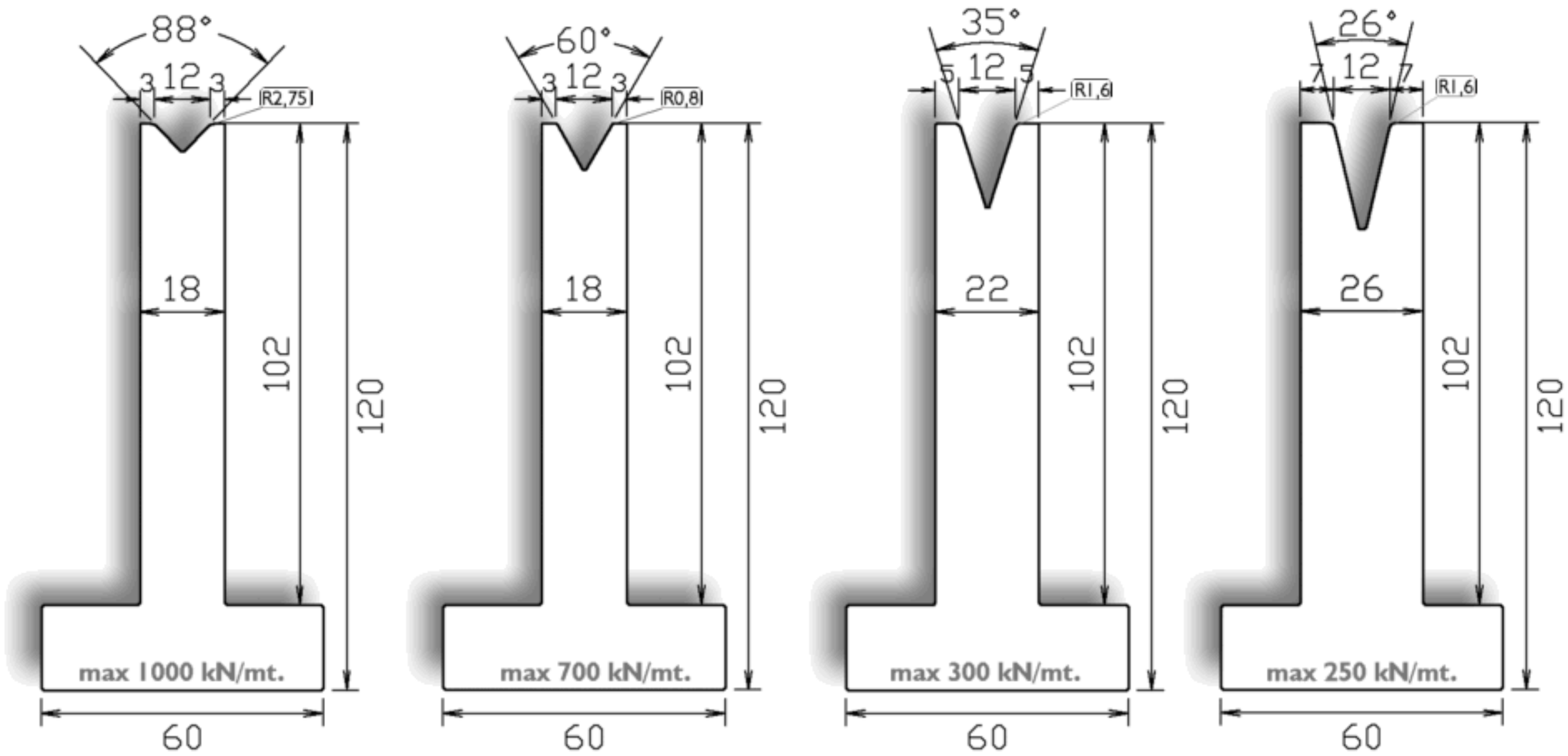

US 420/88° V12 l.mm.835-415-Fraz.

US 420/60° V12 l.mm.835-415-Fraz.

US 420/35° V12 l.mm.835-415-Fraz.

US 420/26° V12 l.mm.835-415-Fraz.

12

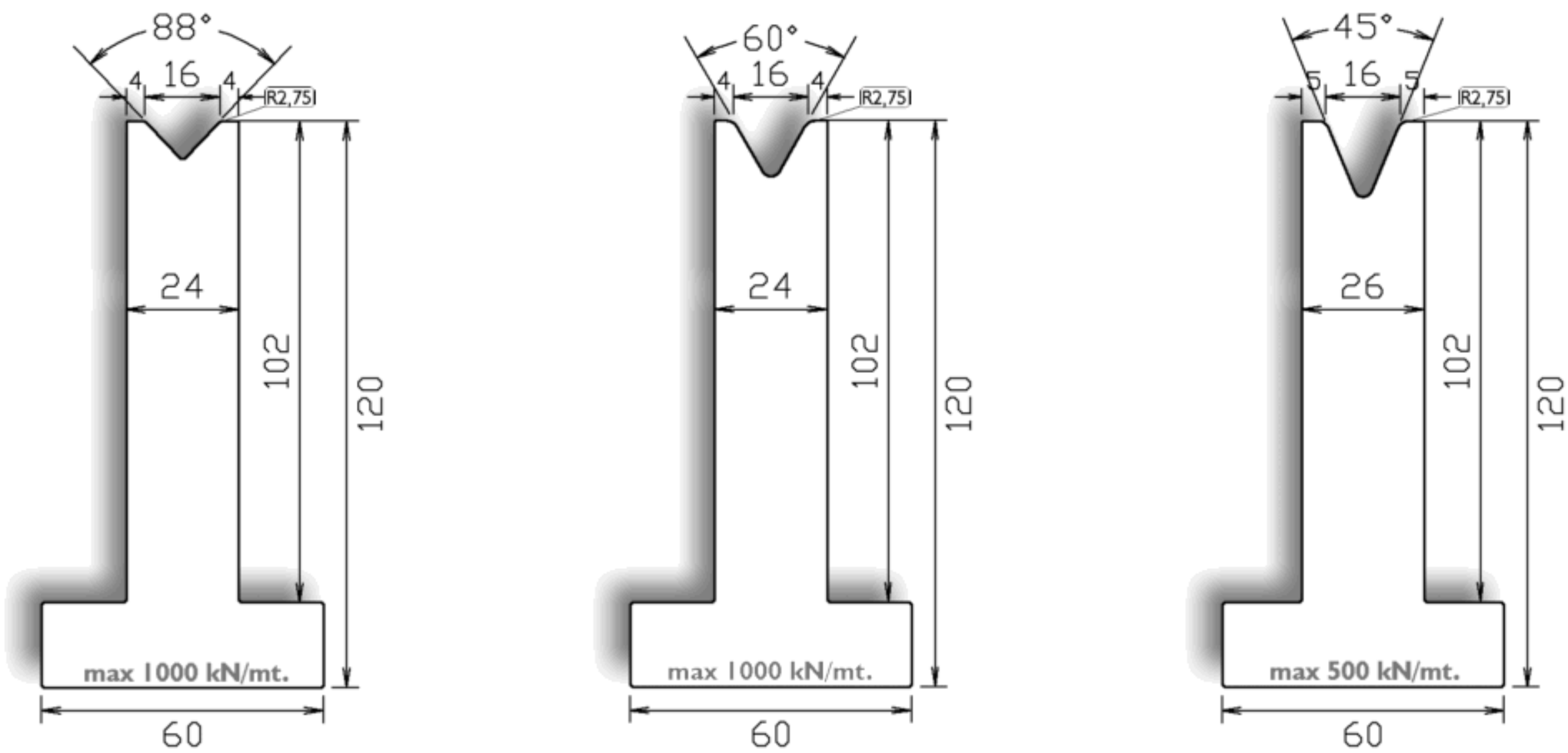

BORST Industrievertretungen
Welf Borst
Luikenweg 28
73733 Esslingen

Tel.: 0711 - 370 36 68
Fax: 0711 - 370 36 68
Mobil: 0151 - 11631111
Email: info@welf-borst.de

US 420/88° V16 l.mm.835-415-Fraz.

US 420/60° V16 l.mm.835-415-Fraz.

US 420/45° V16 l.mm.835-415-Fraz.

16

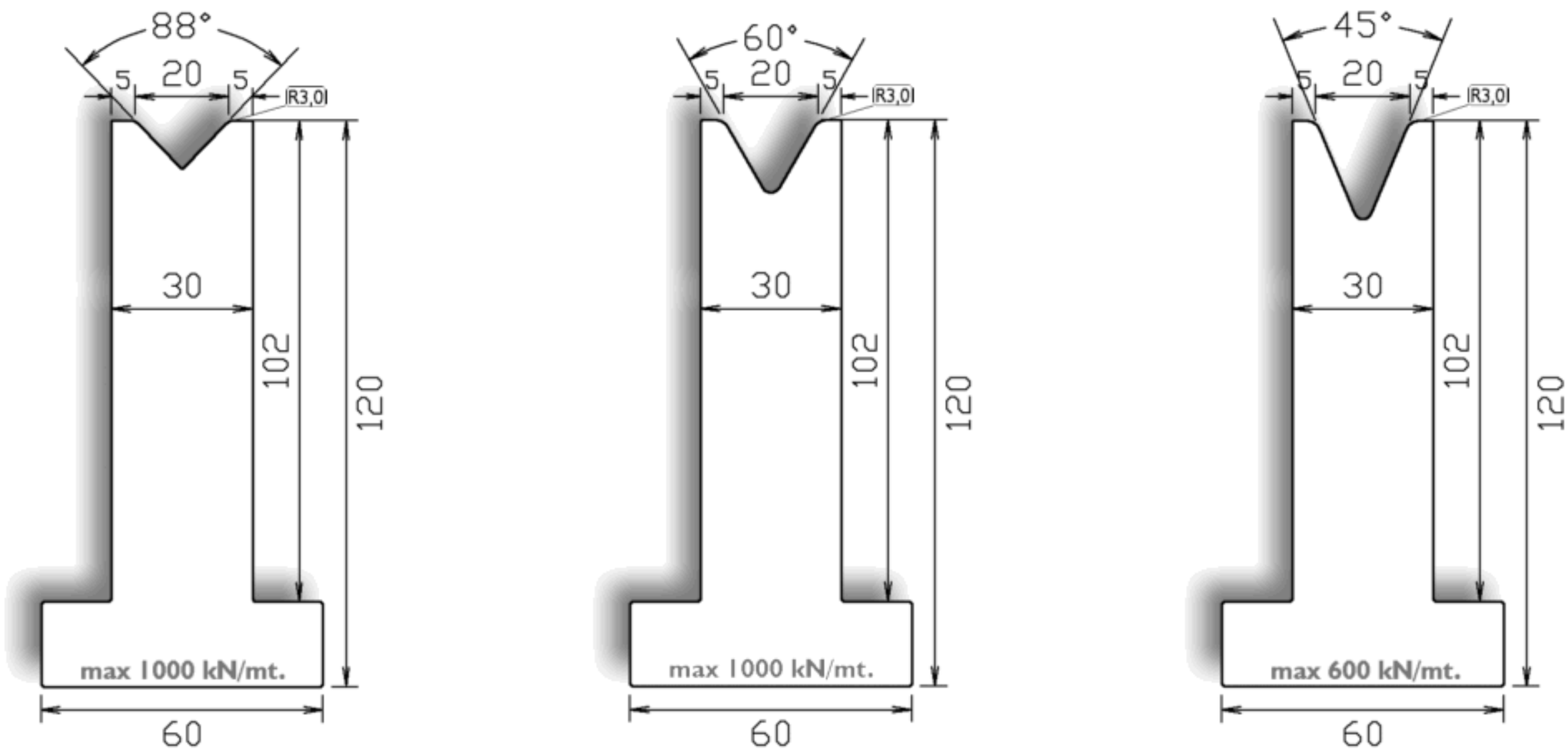

US 420/88° V20 l.mm.835-415-Fraz.

US 420/60° V20 l.mm.835-415-Fraz.

US 420/45° V20 l.mm.835-415-Fraz.

20

US27

scala 1:2

BORST Industrievertretungen
Welf Borst
Luikenweg 28
73733 Esslingen

Tel.: 0711 - 370 36 68
Fax: 0711 - 370 36 68
Mobil: 0151 - 11631111
Email: info@welf-borst.de

25

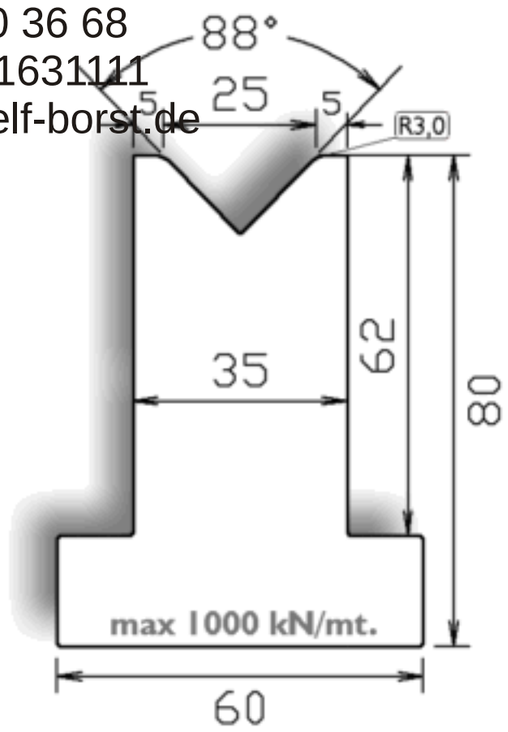

US 220/88° V25
l.mm.835-415-Fraz.

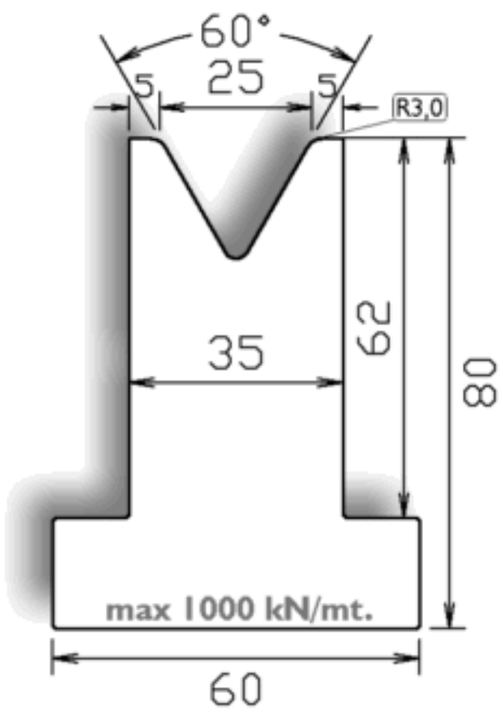

US 220/60° V25
l.mm.835-415-Fraz.

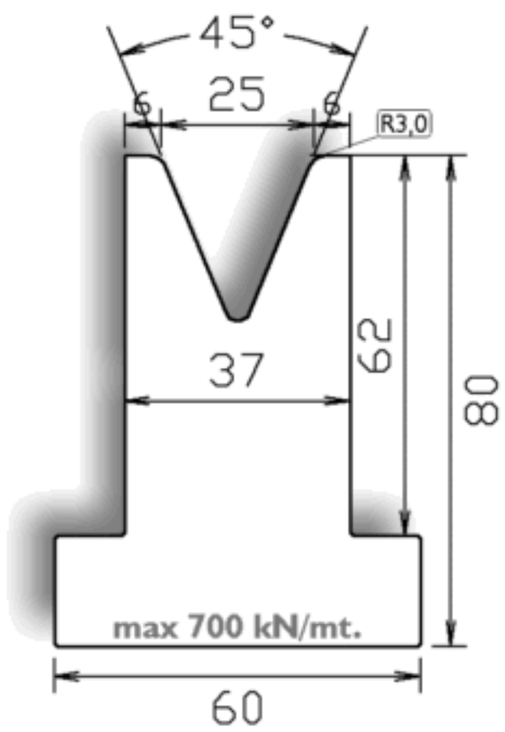

US 220/45° V25
l.mm.835-415-Fraz.

32
40
50

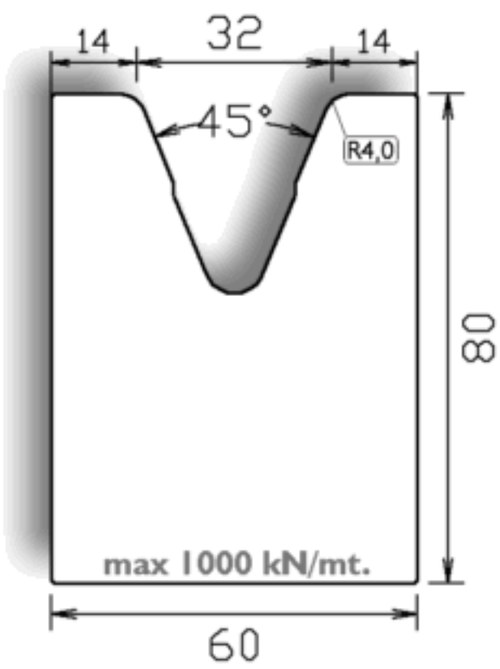

US 220/45° V32
l.mm.835-415-Fraz.

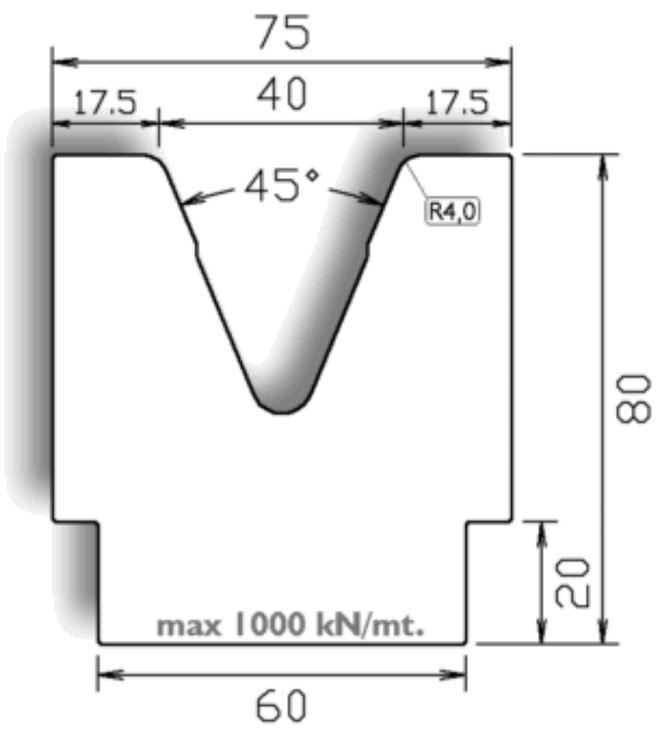

US 220/45° V40
l.mm.835-415-Fraz.

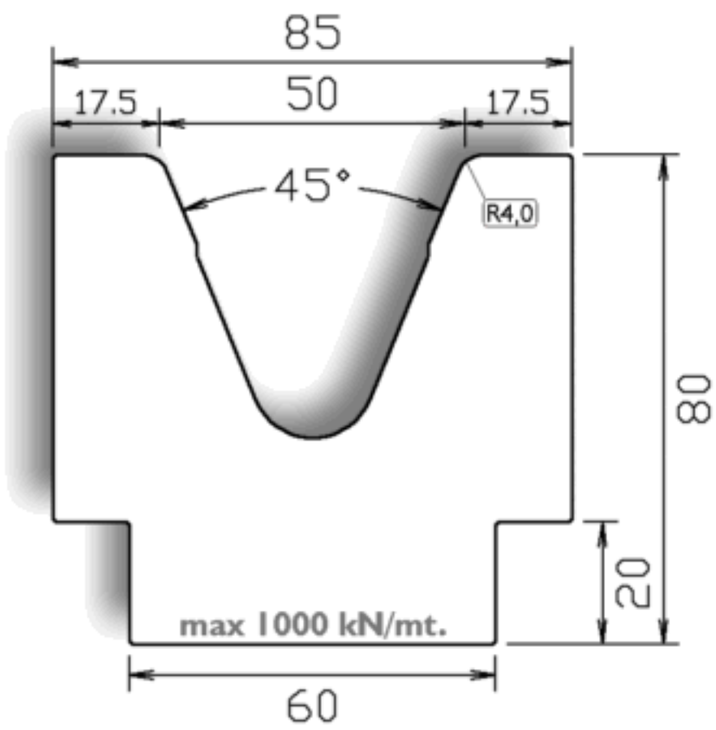

US 220/45° V50
l.mm.835-415-Fraz.

63
80

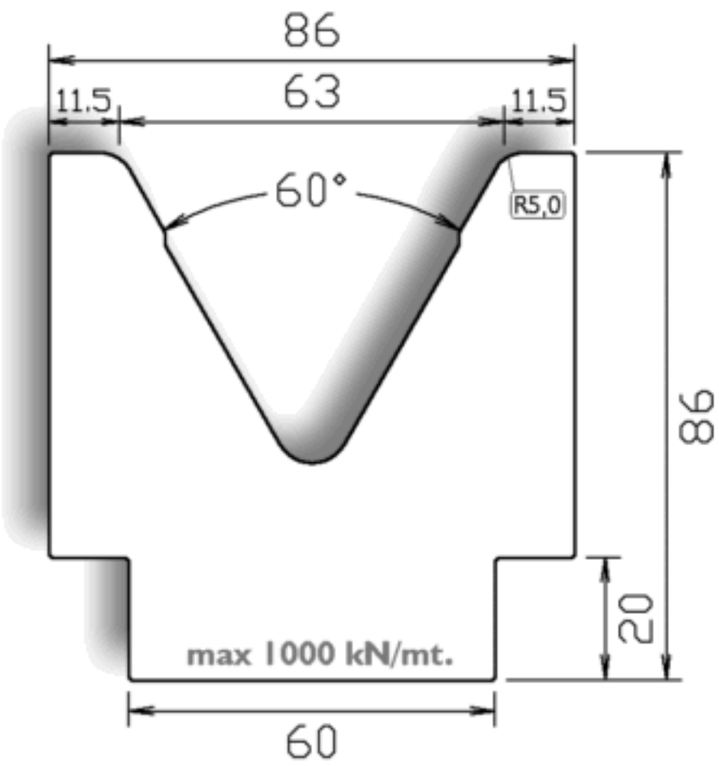

US 220/60° V63
l.mm.835-415-Fraz.

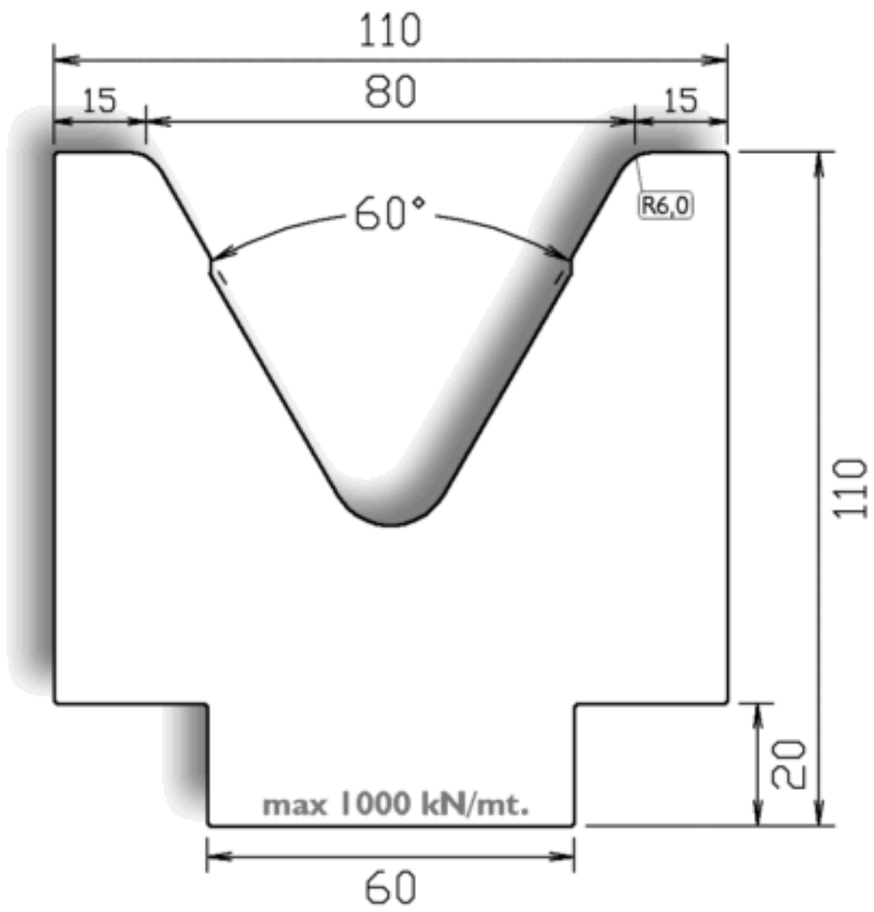

US 220/60° V80
l.mm.835-415-Fraz.

US28
scala 1:2

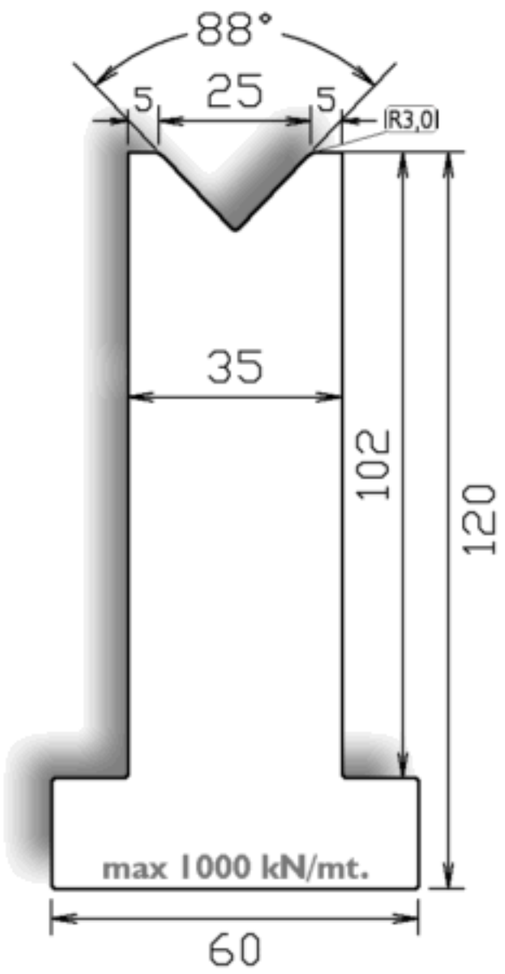

US 420/88° V25
l.mm.835-415-Fraz.

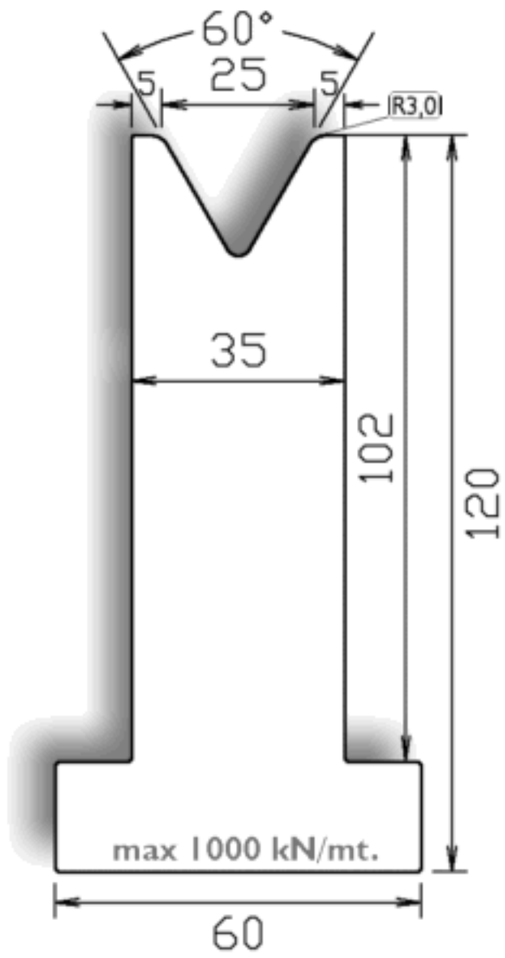

US 420/60° V25
l.mm.835-415-Fraz.

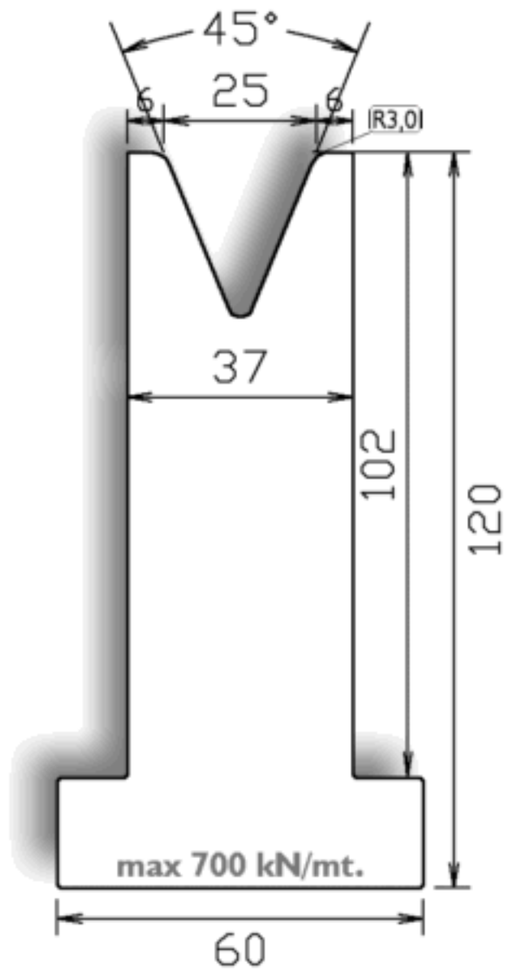

US 420/45° V25
l.mm.835-415-Fraz.

BORST Industrievertretungen
Welf Borst
Luikenweg 28
73733 Esslingen

Tel.: 0711 - 370 36 68
Fax: 0711 - 370 36 68
Mobil: 0151 - 11631111
Email: info@welf-borst.de

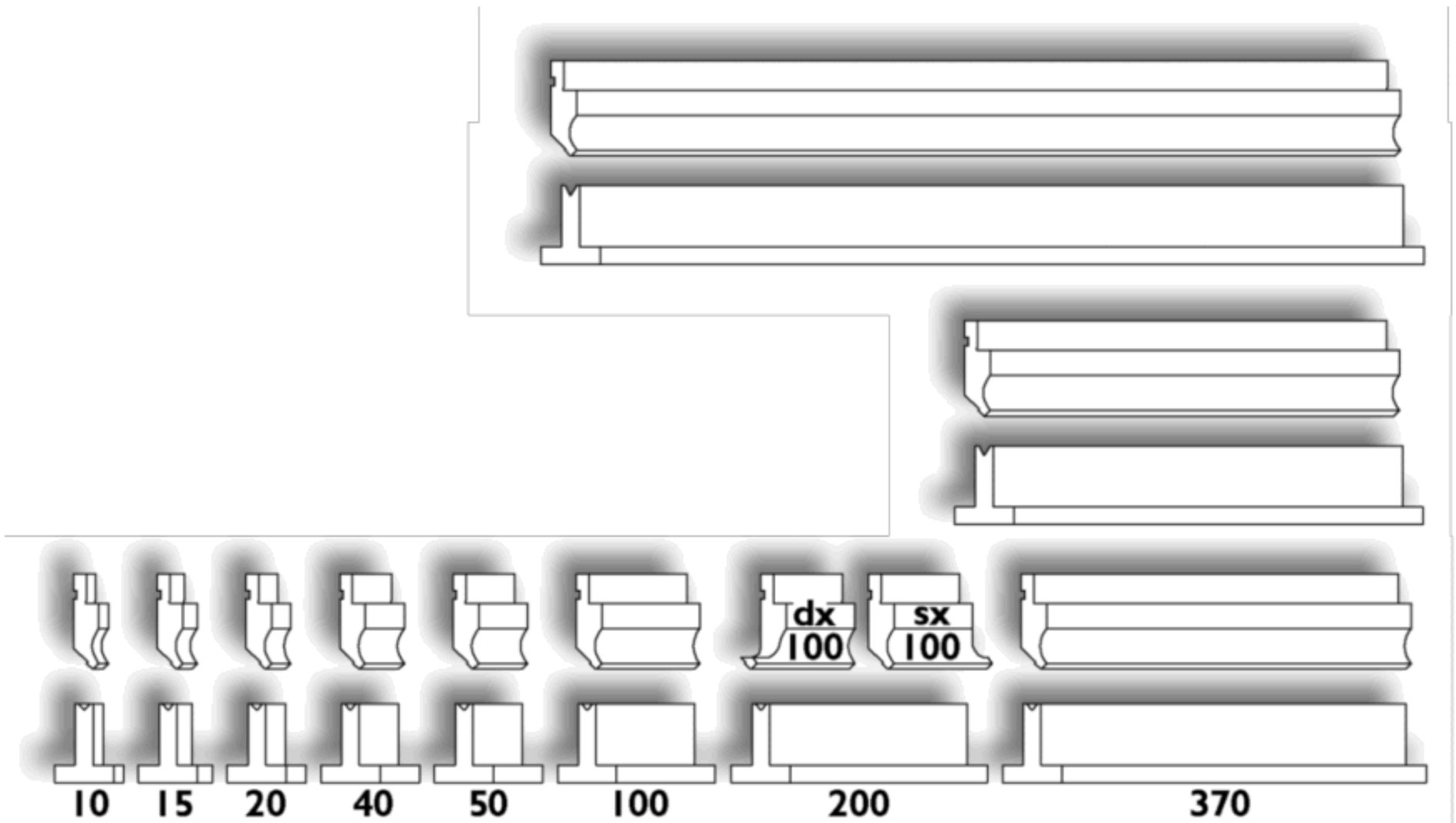

835 mm.

415 mm.

Fraz. 805 mm.

Lunghezze - Lenghts - Längen -Longueures

US29
scala 1:2

BORST Industrievertretungen
Welf Borst
Luikenweg 28
73733 Esslingen

Tel.: 0711 - 370 36 68
Fax: 0711 - 370 36 68
Mobil: 0151 - 11631111
Email: info@welf-borst.de

Andere Werkzeuge in Arbeit

Tecniche di piegatura - Bending techniques

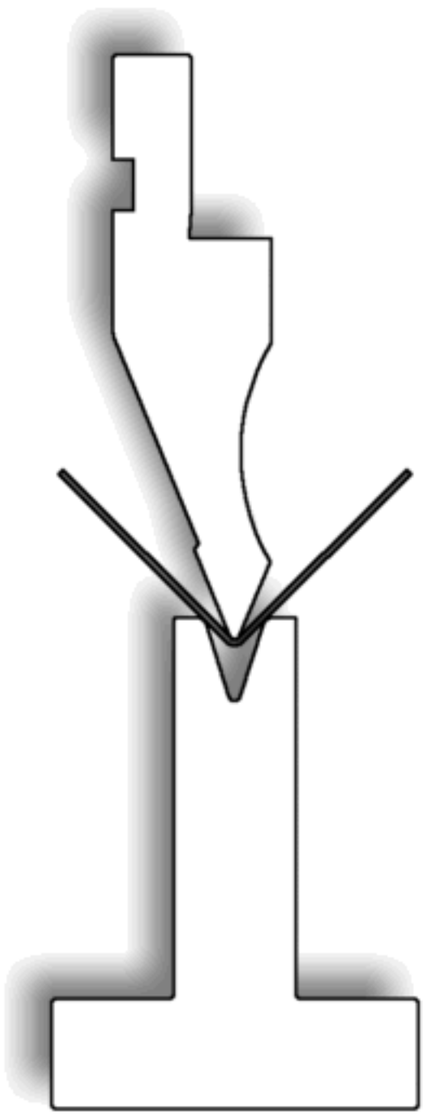

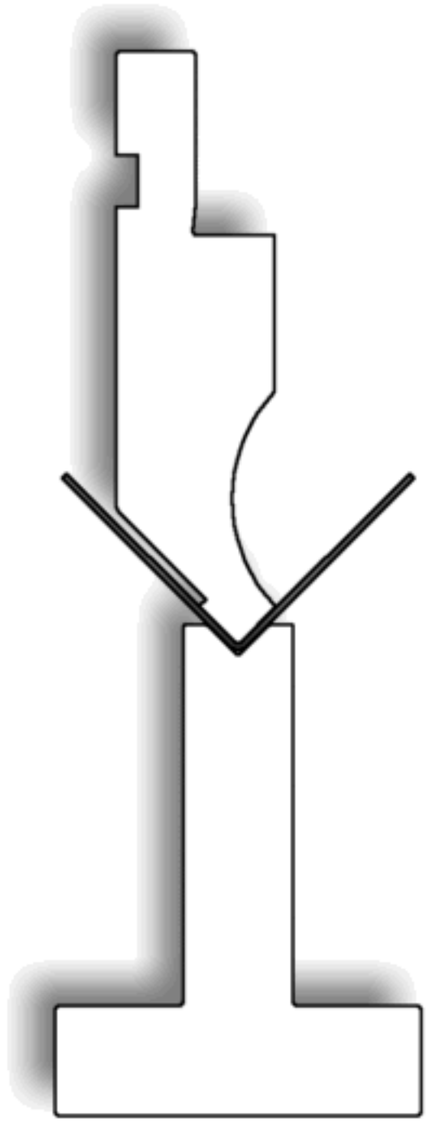

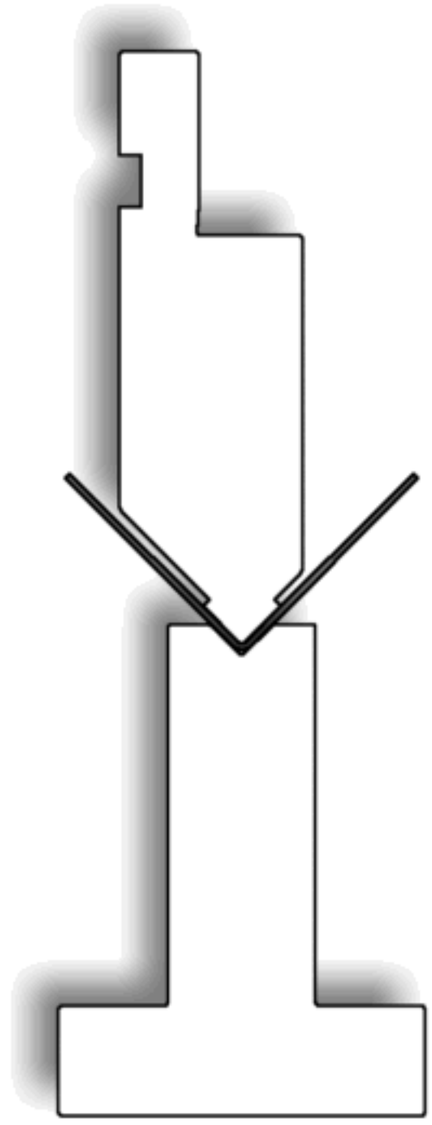

PIEGATURA IN ARIA

Nella piegatura in aria l'angolo di piega è determinato dalla posizione che la punta dell'utensile superiore raggiunge rispetto ai due spigoli della matrice, posizione variabile a seconda dello spessore, della resistenza e dell'elasticità della lamiera.

I vantaggi nell'utilizzo di questa tecnica di piegatura consistono nell'impiego di una minima forza di piegatura e nella possibilità di piegare qualsiasi spessore, compatibilmente al tipo di pressa ed utensili disponibili.

Inoltre gli stessi utensili possono essere utilizzati per differenti tipi di materiale e si possono ottenere angoli inferiori ai 90° e raggi interni di piegatura variabili in proporzione alla larghezza della matrice.

Gli svantaggi consistono nel dover utilizzare lamiere con spessore e resistenza costanti per ottenere risultati soddisfacenti.

AIR BENDING

On bending on air the angle is determinated from position that upper tool point reaches in comparison with the two edges of lower tool. This position is changeable in accordance with thickness, resistance and elasticity of sheet.

Advantages on utilizing this bending technique consist on using a minimum force of bending and in the possibility to bend whoever thickness, according with press type and tools available.

Besides, same tools can be used for different types of material and it can obtain angles lower than 90° and bending inside rayons changeable in proportion to lower tool width.

Disadvantages consist on having to use sheets with constant thicknesses and resistances in order to obtain satisfactory results.

BORST Industrievertretungen
Welf Borst
Luikenweg 28
73733 Esslingen

Tel.: 0711 - 370 36 68
Fax: 0711 - 370 36 68
Mobil: 0151 - 11631111
Email: info@welf-borst.de

PIEGATURA FONDO MATRICE

La piegatura a fondo matrice opera, nella fase iniziale, come per la piegatura in aria, mentre nella fase finale preme sul raggio interno della lamiera piegata determinando l'angolo di piegatura.

Praticamente l'angolo di piegatura viene raggiunto agendo sulla forza applicata alla punta dell'utensile superiore nella fase di chiusura.

Essendo il raggio di curvatura della lamiera variabile in funzione dello spessore e dell'apertura della matrice, diventa necessario variare la forma degli utensili, anche in considerazione dei diversi ritorni elastici tra i vari materiali.

Nell'utilizzo di questa tecnica di piegatura le irregolarità dello spessore e le variazioni della resistenza della lamiera hanno una minima influenza.

Pertanto con un corretto accoppiamento degli utensili ed una costante forza di piegatura si può ottenere una sicura ripetibilità dell'angolo di piega.

Gli aspetti negativi consistono in un leggero aumento della forza di piegatura (+20% rispetto alla piegatura in aria, a parità di condizioni), nella impossibilità di ottenere angoli inferiori ai 90° e nel utilizzo di lamiere con spessore massimo di mm.5

BENDING ON LOWER TOOL BOTTOM

Bending on lower tool bottom works, on initial phase, as for bending on air, while on final phase pulls on inside rayon of sheet bent determinating bending angle.

Bending angle is been reached acting on force applied on upper tool point on closing phase.

As rayon of curvature of sheet is changeable on function of thickness and opening of lower tool, it becomes necessary to change tool mould, also considering different elastic returns between the different materials.

On utilizing this bending technique irregularities of thickness and resistance variations of sheet have a minimum influence.

So, with a correct coupling of tools and a constant bending force on can obtain a sure repeatition of bending angle.

Negative aspects consist on a light increase of bending force (+20% respect of bending on air, at the same conditions), on the impossibility to obtain angles inferior to 90° and on utilizing sheets with maximum thickness of mm.5.

CONIATURA

La coniatura è un procedimento di piegatura che permette di ottenere pieghe perfettamente a 90°anche in presenza di consistenti differenze di spessore e di resistenza della lamiera.

Per contro richiede una forza superiore rispetto alle altre tecniche di piegatura, quantificabile da 5 a 7 volte quella necessaria per la piegatura in aria. Infatti la punta dell'utensile superiore deve coniare il normale raggio di piegatura, facendolo combinare con la forma dell'utensile stesso.

Si possono pertanto ottenere pieghe perfette con raggi di curvatura molto piccoli. Gli utensili devono essere calibrati in base allo spessore ed al tipo di lamiera, che non deve comunque superare il limite massimo di mm.2

COINING

Coining is a bending process that permits to obtain bends at 90° perfectly also in the presence of big differences of thickness and sheet resistance.

On the contrary requires an higher force in comparison with other bending techniques, that can be estimated from 5 to 7 times of force necessary for bending on air. In fact, point of upper tool must coin the normal ray of bending on arranging it with tool form. So, on can obtain perfect bends with ray of curvature very little. Tools must be gauged in line with thickness and type of sheet that it must not exceed maximum limit of 2 mm.

ATTENZIONE :

La piegatura a fondo matrice e quella per coniatura richiedono un'accurata regolazione della pressione in base all'effettiva lunghezza di piegatura ed ai parametri degli utensili, onde evitare di danneggiarli.

ATTENTION :

Bending on lower tool bottom and coining requires a careful regulation of the pressure in line with actual bending length and parameters of tools, avoiding to damage it.

Tavola di piegatura - Bending chart - Abkant-übersicht -Table de pliage

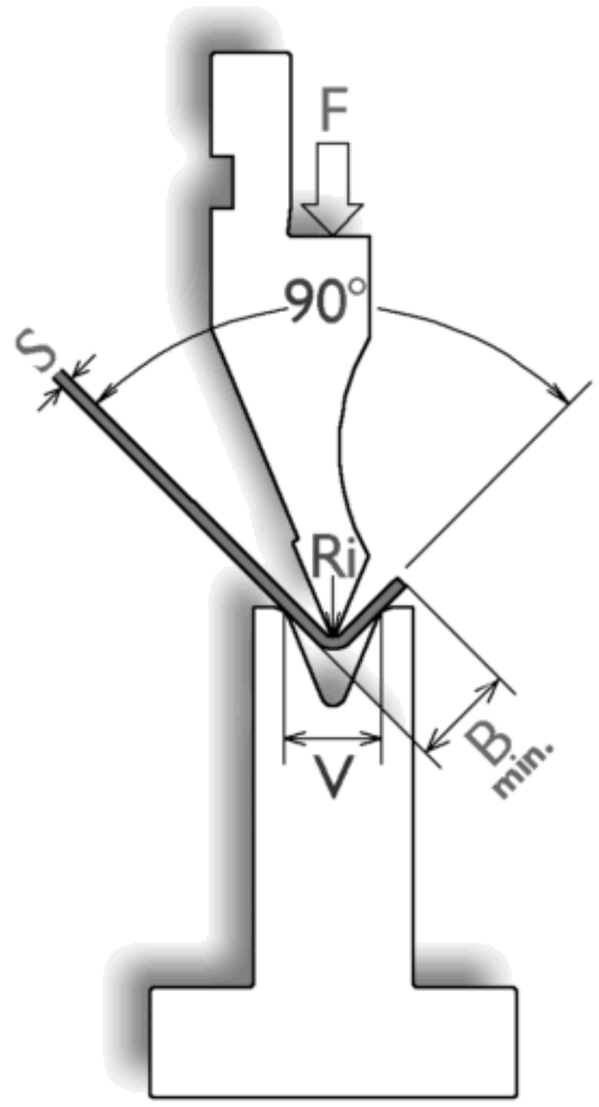

BORST Industrievertretungen
Welf Borst
Luikenweg 28
73733 Esslingen

Tel.: 0711 - 370 36 68
Fax: 0711 - 370 36 68
Mobil: 0151 - 11631111
Email: info@welf-borst.de

S mm.		0,6		0,8		1,0		1,2		1,5		2,0	
V mm.		6	8	6	8	6	8	8	10	10	12	12	16
F kN/mt	R.200 N/mm²	20	10	30	20	60	40	60	40	70	60	110	80
	R.450 N/mm²	40	30	70	50	130	80	130	100	160	130	250	170
	R.700 N/mm²	60	40	110	80	190	130	200	150	250	200	390	260
Ri mm.		1,0	1,3	1,0	1,3	1,0	1,3	1,3	1,7	1,7	2,0	2,0	2,7
90°=B mm.		4,5	6,0	4,6	6,1	4,7	6,2	6,3	7,7	7,8	9,2	9,5	12,3
60°=B mm.		6,3	8,3	6,4	8,4	6,5	8,5	8,6	10,6	10,8	12,8	13,0	17,0
35°=B mm.		10,3	13,6	10,4	13,7	10,5	13,8	13,9	17,2	17,4	20,7	21,0	27,6

S mm.		2,5		3		4		5		6		8	
V mm.		16	20	20	25	32	40	40	50	50	63	63	80
F kN/mt	R.200 N/mm²	130	90	140	110	150	110	190	140	210	160	310	220
	R.450 N/mm²	290	210	320	240	340	250	420	320	480	360	690	500
	R.700 N/mm²	440	330	500	370	530	390	660	490	750	550	1070	780
Ri mm.		2,7	3,3	3,3	4,2	5,3	6,7	6,7	8,3	8,3	10,5	10,5	13,3
90°=B mm.		12,6	15,4	15,6	19,2	24,6	30,3	30,8	37,9	38,4	47,5	48,5	60,6
60°=B mm.		17,3	21,3	21,5	26,5	34,0	42,0	42,5	52,5	53,0	66,0	67,0	84,0
35°=B mm.		27,9	34,5	34,8	43,1	55,2	68,5	69,0	85,6	86,1	107,8	108,8	137,0

S mm.		10		12		15		20		25		30	
V mm.		80	100	100	125	160	200	200	250	250	320	320	400
F kN/mt	R.200 N/mm²	380	280	430	320	390	290	560	420	700	510	770	590
	R.450 N/mm²	840	630	960	720	870	660	1260	950	1580	1150	1740	1320
	R.700 N/mm²	1310	980	1490	1120	1350	1020	1960	1480	2450	1790	2710	2050
Ri mm.		13,3	16,7	16,7	20,8	26,7	33,3	33,3	41,7	41,7	53,3	53,3	66,7
90°=B mm.		61,6	75,7	76,7	94,4	120,6	148,9	151,4	186,8	189,3	238,8	241,3	297,8
60°=B mm.		85,0	105,0	106,0	131,0	167,5	207,5	210,0	260,0	262,5	332,5	335,0	415,0
35°=B mm.		138,0	171,3	172,3	213,8	273,5	340,1	342,6	425,7	428,2	544,6	547,1	680,1

Piegatura in aria - Air bending - Abkant in der luft - Pliage dans l'air
F = kN al metro - kN for meter - kN pro meter - kN par métre
S = spessore lamiera - sheet thickness - blech stärke - epaisseur de la tôle
R = resistenza lamiera - sheet resistance - Blechfestigkeit - resistance de la tôle